# Status Report - HTR-PM (China)

Downloaded on: Nov 25, 2026 3:40 PM CET
Published Date : Oct 11, 2024 10:14 AM CET

## 1. Overview

☑ **In Operation**

| Number of Units | Country | |
|---|---|---|
| 1 | China | Link to PRIS |

☐ **Under Construction**

☐ **Described in**

| | |
|---|---|
| Link to PRIS | -- |

☐ **New Concept**

| | |
|---|---|
| Number of Units | -- |
| Year | -- |

**Reference Plant**

| | |
|---|---|
| Name of Site | -- |
| Link to PRIS | -- |
| Net Power Output (MWe) | 200 |
| Gross Power Output (MWe) | 210 |

### 1.1 Introduction

**Development history**

The High Temperature Gas Cooled Reactor - Pebble-bed Module (HTR-PM) is a modular High Temperature Gas Cooled Reactor (HTGR) demonstration power plant which is designed by the Institute of Nuclear and New Energy Technology (INET), Tsinghua University of China. The current HTR-PM design falls into the category of innovative small sized reactors, featuring 200MW electrical output by two reactor modules. In January 2006 the project named “ Large Advanced Pressurized Water Reactor and High-Temperature Gas-cooled Reactor Nuclear Power Plants” became one of the 16 top priority projects of the “ Chinese Science and Technology Plan” for the period 2006 - 2020. By February 2008 the implementation plan and the budget for the HTR-PM project was approved by the State Council of China. The demonstration nuclear power plant is being constructed in Rongcheng,

Shandong Province, China. The construction of the plant is scheduled to be completed by the end of 2013.

Research and development work in China on high temperature gas cooled reactors started in the 1970s[1-3]. In the 1970s, the research and development work was focused on gas-cooled breeders using thorium fuel cycle. The R&D and design work was carried out for a helium cooled thorium breeder of 100MW output, using spherical fuel elements. The research and development work included:

- Neutronic and thermo-hydraulic code development and reactor conceptual design,
- Tests and design for graphite reactor core internals, pressure vessels, reactor shut-down components, helium circulators, steam generators and other key components,
- Process system engineering
- Helium technology,
- Coated particle and fuel element technology as well as spent fuel reprocessing.

Though the thorium reactor project was terminated in the late 1970s, the work in this time period resulted in a lot of R&D achievements. It formed good basis for further development work from the technological point of view.

In the early 1980s, research and development work of gas-cooled reactor technology continued in China, and international cooperation was introduced into the R&D work. INET started to cooperate with the Nuclear Research Centre, Juelich, Germany to perform design and safety studies of modular HTGR designs. Much work was done on code development for reactor physics, thermohydraulics and safety analysis. During this time period, the research and development work on gas-cooled reactors was supported by the State Science and Technology Commission of China. Research projects included code development, safety analysis, fuel and fuel cycle technology as well as HTGR application. Conceptual designs of modular high-temperature gas-cooled reactors were made for different fuelling schemes and for different application purposes. At this time, the conceptual design of a two-zone core modular reactor was proposed, with a centre moving zone of graphite pebbles which are fuel-free. This two-zone reactor could generate thermal power of up to 500MW and the maximum fuel temperature could still be limited to allowable values at loss of coolant accident which is the most important safety feature of modular HTGR designs.

Research work on HTGR applications was also performed in the early 1980s. Investigations were made into the oil recovery and petrochemical industries and into the coal industry to study the application potential of HTGR on power-heat co-generation basis. The purpose was to use HTGR nuclear heat for the substitution of fossil fuels to generate the great amount of process heat which is used in these industries, thus saving a lot of fossil fuels and resulting in less environmental pollution. Under cooperation with German industries and research centres, feasibility studies were made together with the Shengli Oil Field and Yanshan Petrochemical Complex to use HTGR process heat for the heavy oil recovery at the oil field and for the petrochemical plant.

In 1986, the HTGR R&D projects were included into the national high technology program. Research and development activities on modular HTGR technologies started to be carried out systematically. R&D projects covered the following areas, with several research and design institutions in China and international cooperation being involved:

- Modular HTGR design,

- Fuel manufacture technology,
- Reprocessing technology of thorium fuel cycle,
- Graphite and other structural materials,
- Helium technology and components,
- Pressure vessel,
- Pebble bed flow and fuel handling technology

From the above research work, the following main achievements were made:

- Methodologies and capabilities for designing HTGRs were established, and the conceptual design of a 10MW pebble bed test reactor was worked out.
- Remarkable progress was made in the manufacturing technology of spherical coated particle fuels, including progresses in manufacturing fuel kernel, coating, matrix graphite, fuel element, and in the measurement techniques. Equipment for fuel manufacturing was installed, sample coated particles were manufactured which is proved to have good performance.
- A number of test facilities were set up, for example helium test loops and fuel handling test rigs. Experiments were performed to test helium sealing and helium purification technologies and fuel handling components. Research was also made on fuel burn-up measurement. Progress was also made in research of metallic alloy and insulation materials.
- HTGR development strategies up to the year 2000 were formulated. It was made recognized that modular high temperature gas-cooled reactors have advanced inherent safety features, and they have the potential to be used for power generation with high efficiency and for process heat applications. Considering the conditions in China, it was proposed, as the first major strategic step of HTGR development, to build a 10MW pebble bed test reactor by the year 2000. The purpose of the erection of the test reactor is to acquire the know-how in designing, constructing and operating modular helium cooled reactors.

In March 1992, the state government approved the project of constructing the 10MW pebble bed high temperature gas-cooled test reactor (referred to as HTR-10). Basic design of HTR-10 was completed in 1994[4], and the Construction Permit was issued after licensing review of the Preliminary Safety Analysis Report and other relevant application documents. The construction of HTR-10 formally started with the first concrete being poured in June 1995. In parallel to the engineering design and construction work, a number of engineering tests were made, including tests for the fuel handling system, reactor shutdown system, once-through steam generator, etc. By the end of 1998, key components like pressure vessels, the steam generator and helium circulator were manufactured, and installation and commissioning work started. In the meantime, spherical fuel elements were manufactured and qualified through irradiation experiments. In December 2000, the HTR-10 reactor was loaded with nuclear fuel and went critical.

In January 2003, the reactor reached full power of 10MW. The HTR-10 reactor is currently under operation, and safety experiments are being performed with the test reactor, and HTR-10 is supposed to operate for long term. At the same time, development work of helium turbine technologies is being performed.

From April 2003 to September 2006 INET completed four experiments to confirm and verify claimed crucial inherent safety features of modular HTRs:

- Loss of offsite power without any counter-measures,
- Loss of offsite power without any counter-measures,

- Loss of main heat sink without any counter-measures,

and especially

- Withdrawal of all rods without any counter-measures.

All these experiments were authorized, guided and supervised by the National Nuclear Safety Authority

During this R&D-period of the HTR-10, five significant achievements were obtained:

1. Manufacture of spherical coated particle fuel element: the know-how of fabricating fuel elements for the HTR-10 was mastered. The free Uranium fraction could steadily be decreased to a value as low as 3´10-5.
2. Manufacture of spherical coated particle fuel element: the know-how of fabricating fuel elements for the HTR-10 was mastered. The free Uranium fraction could steadily be decreased to a value as low as 3´10-5.
3. Helium process technologies: such as helium sealing and purification, the lubrication for rotating equipments in a helium atmosphere, electrical insulation and rotor dynamics,
4. Domestic manufacture of key equipments for HTGRs: this mainly covers the reactor pressure vessel, the steam generator pressure vessel, the hot gas duct, the once-through steam generator with helical tubes, the helium blower, the fuel handling equipments and reflector graphite components.
5. Successful development of fully digital reactor protection systems.

A second step of HTGR-application in China was started in 2001 [8-11] when the High Temperature Gas-cooled Reactor - Pebble-bed Module (HTR-PM) project was launched. The preliminary investment agreement was signed in December 2004 by " China Huaneng Group", by " China Nuclear Engineering Corporation" and by " Tsinghua Holding Corporation". In January 2006 the project named " Large Advanced Pressurized Water Reactor and High-Temperature Gas-cooled Reactor Nuclear Power Plants" became one of the 16 top priority projects of the " Chinese Science and Technology Plan" for the period 2006 – 2020. By February 2008 the implementation plan and the budget for the HTR-PM project was approved by the State Council of China. In November 2003, the " Chinergy Company" has been established and was designated to be the main contractor of the HTR-PM nuclear island, while in January 2007 the " Huaneng Shandong Shidao Bay Nuclear Power Company" was founded being the owner of the HTR-PM demonstration plant.

Compared with HTR-10, the components of HTR-PM are scaled up, for example the helium circulator and the fuel handling equipment. From the HTR-10, certain research and development work on some special technologies or equipment are ongoing supported by the central government under the project " Large Advanced Pressurized Water Reactor and High-Temperature Gas-cooled Reactor Nuclear Power Plants". Significant progress has also been made in Rongcheng, Shandong Province, the site for demonstration power plant. Currently, both the Preliminary Safety Analysis Report and the Environmental Impact Assessment Report have been approved by the National Nuclear Safety Administration. The first tank of concrete will be poured soon.

***HTR-PM technological goals and application***

The HTR-PM should achieve the following technical goals:

( 1 )Demonstration of inherent safety-features

The inherent safety features of modular HTGR power plants guarantees and requires that under all conceivable accident scenarios the maximum fuel element temperatures will never surpass its design limit temperature without employing any dedicated and special emergency systems [e.g. core cooling systems or special shut-down systems, etc.]. This ensures that accidents [e.g. similar to LWR core melting] are not possible so that unacceptable large releases of radioactive fission products into the environment will never occur

( 2 ) Demonstration of economic competitiveness

The first HTR-PM demonstration power plant will be supported by the Chinese government, so that the owner can always maintain the plant operation and obtain investment recovery. However, this government supported demonstration plant has to demonstrate that a cost overrun during the construction period will be avoided and that the predicted smooth operation and performance will be kept. Hence, the demonstration plant must clearly demonstrate that follow-on HTR-PM plants will be competitive to LWR plants without any government support.

( 3 ) Confirmation of proven technologies

In order to minimize the technical risks, the successful experiences gained from the HTR-10 and from other international HTGR plants will be fully utilized in the HTR-PM project. The HTR-PM reactor design is very similar to the HTR-10. The turbine plant design will use the mature technology of super-heated steam turbines which is widely used in other thermal power plants. Besides, the manufacture of fuel elements will be based on the technology verified and proven during the HTR-10 project. In addition, the key systems and equipments of the plant will be rigorously tested in large scale experimental rigs in order to guarantee the safety and reliability of all components. Furthermore, international mature technologies and successful experiences will be absorbed through international technical consultations.

( 4 ) Standardization and modularization

The HTR-PM demonstration plant, consisting of two pebble-bed module reactors of combined 2x250 MWth power, adopts the operation-mode of two modules connected to only one steam turbine/generator set. This design allows to demonstrate the advantages and key benefits of employing and implementing a design of standardization and modularization. If the construction and operation of the HTR-PM demonstration plant proves to be successful, larger scale HTR-PM plants - using multiple-modules feeding one steam turbine only - will become a reality.

The HTR-PM is a land-based modular nuclear power generating unit. As the first industrial HTGR demonstration plant in China, it is currently designed for the purpose of power generation. When market requires, more modules can be constructed in series to form a larger nuclear power plant with appropriate power output. The plant design is aimed at standardization and modularization.

***Summary level Technical Data***

***Table***

| Items | Characteristics |
|---|---|
| Installed capacity (thermal and electrical) | 2x250 $MW_{th}$, 211 $MW_e$ |
| Mode of operation (basic, load follow) | Basically for base load, potential for load following |
| Availability target | Availability factor target: 90%<br>Load factor target: 85% |
| Summary of major design characteristics (e.g. fuel types, enrichment, coolant and moderator materials, structural materials, core dimensions, fuel dimensions, core material dimensions, vessel material and dimensions, number of circuits/loops) | Type of fuel: $UO_2$ enriched to 8.5% in coated particles dispersed in graphite matrix, spherical fuel elements of 6cm diameter.<br>Type of coolant/moderator: Helium/Graphite.<br>Type of structural material: Graphite and carbon bricks as core structural materials, steel vessels.<br>Core type/characteristic dimensions: Pebble bed core, 3.0m in diameter, 11.0m in height.<br>Vessel type/characteristic dimensions: Carbon steel reactor vessel, 5.7m of inner diameter and 25 m of overall height.<br>Cycle type: Indirect cycle with steam generator<br>Number of circuits: Three circuits, with the first one being the primary system cooling the reactor, the second one being the steam turbine circuit and the third one being the condenser cooling water circuit. |
| Simplified schematic diagram of the nuclear installation | see Figure 1 |
| Neutron physical characteristics and power peaking factors | Strong negative temperature reactivity feedback over the whole temperature range and for all operational states<br>Average power density of fuel zone: 3.2 $MW/m^3$.<br>Maximum power density of fuel zone: 6.6 $MW/m^3$.<br>Average output power per fuel ball: 0.6kW.<br>Maximum power per fuel ball: 1.8kW. |
| Reactivity control mechanisms | Control rod movement is the main reactivity control mechanism.<br>Application of small absorber ball system is mainly for cold shutdown. |

| | |
|---|---|
| Cycle type and thermodynamic efficiency | Indirect steam turbine cycle with reheating.<br>Turbine generator thermodynamic efficiency: 40%. |
| Thermal hydraulic characteristics | See Table 1 |
| Maximum/average discharge burn up of fuel | 90,000MWd/tU |
| Fuel lifetime or residence time in the core | 1057 days |
| Design lifetime for reactor core, vessel and structures | 40 years |
| Design and operating characteristics of systems for non-electric applications, including type, ranges for sharing energy production between different applications and specific production rate per unit of thermal and equivalent electric energy | Currently not applicable |

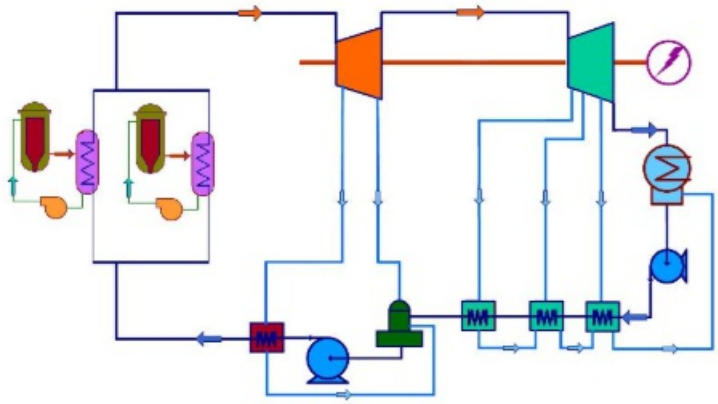

Fig. 1 - Simplified Schematic Diagram of the HTR-PM Demonstration Power Plant

## 1.2 Development Milestones

| | |
|---|---|
| 2001 | Launch of commercial HTR-PM project |
| 2004 | Standard design of HTR-PM started |
| 2006 | HTR-PM demonstration power plant approved as one of National Science and Technology Major Projects |
| 2006 | Huaneng Shandong Shidaowan Nuclear Power Co., Ltd, the owner of the HTR-PM, established by the China Huaneng Group, the China Nuclear Engineering Group Co. and Tsinghua University |
| 2006-2008 | Basic design of HTR-PM completed |
| 2009 | Assessment of HTR-PM PSAR completed |
| 2012 | First Pour of Concrete of HTR-PM |
| 2013 | Fuel plant construction started |
| 2014 | Qualification irradiation tests of fuel elements completed |
| 2015 | Civil work of reactor building finished |
| 2016 | RPV and core barrel etc. delivered, installation of main components ongoing |
| 2017 | Fuel plant achieved expected production capacity |
| 2020 - Q4 | Startup commissioning test of primary circuit |
| 8.2021 | Operation License |
| 9.2021 | First criticality |

| | |
|---|---|
| 20.12.2021 | Grid connection |
| 2022 | Full power operation |

### 1.3 Design organization or vendor company

### 1.4 Links to designer/vendor website

### 1.5 Design Description

### 1.6 Licensing Application Support Documents

### 1.7 Reactor Unit in PRIS

## 2. Category Fields

Table 1: ARIS Category Fields

| ARIS Category | Value | Units of Examples |
|---|---|---|
| Current/Intended Purpose | Commercial – Electric/Non-Electric | e.g. Commercial – Electric/Non-electric, Prototype/FOAK, Demonstration, Experimental |
| Main Intended Application (once commercial) | Baseload, Non-electric (District Heating) | e.g. Baseload, Dispatchable, Off-grid/Remote, Mobile/Propulsion, Non-electric (specify) |
| Reference Location | Inland | e.g. On Coast, Inland, Below-Ground, Floating-Fixed, Marine-Mobile, Submerged-Fixed (Other-specify) |
| Reference Site Design (reactor units per site) | | e.g. Single Unit, Dual Unit, Multiple Unit (# units) |
| Core Coolant | He | H2O, D2O, He, CO2, Na, Pb, PbBi, Molten Salts, (Other-specify) |
| Reactor Core Size (1 core) | 30 MWth <= Thermal power < 1000 MWth | e.g. Thermal Power < 30 MWth, 30 MWth ≤ Thermal power < 1000 MWth, 1000 MWth ≤ Thermal power ≤ 3000 MWth, Thermal power > 3000 MWth |
| Reactor Type | GCR | e.g. PWR, BWR, HWR, SCWR, GCR, GFR, SFR, LFR, MSR, ADS |

| | | |
|---|---|---|
| Reactor Size | SMR | e.g. PWR, SMR |
| Neutron Moderator | Graphite | e.g. H2O, D2O, He, CO2, Na, Pb, PbBi, Molten Salts, (Other-specify) |
| NSSS Layout | Loop-type | e.g. Loop-type (# loops), Direct-cycle, Semi-integral, Integral, Pool-type |
| Primary Circulation | | e.g. Forced (# pumps), Natural |
| Thermodynamic Cycle | Rankine | e.g. Rankine, Brayton, Combined-Cycle (direct/indirect) |
| Secondary Side Fluid | H2O | e.g. H2O, He, CO2, Na, Pb, PbBi, Molten Salts, (Other-specify) |
| Fuel Form | Coated Sphere | e.g. Fuel Assembly/Bundle, Coated Sphere, Plate, Prismatic, Contained Liquid, Liquid Fuel/Coolant |
| Fuel Lattice Shape | Spherical | e.g. Square, Hexagonal, Triangular, Cylindrical, Spherical, Other, n/a |
| Rods/Pins per Fuel Assembly/Bundle | | e.g. #, n/a |
| Fuel Material Type | Oxide | e.g. Oxide, Nitride, Carbide, Metal, Molten Salt, (Other-specify) |
| Design Status | Operational | e.g. Conceptual, Detailed, Final (with secure suppliers) |
| Licensing Status | In Operation | e.g. DCR, GDR, PSAR, FSAR, Design Licensed (in Country), Under Construction (# units), In Operation (# units) |
| Neutron Spectrum | Thermal | e.g. Fast, Thermal |

# 3. Parameter Fields

Table 2: ARIS Parameter Fields

| ARIS Parameter | Value | Units of Examples |
|---|---|---|
| **Plant Infrastructure** | | |
| Design Life | 40 | Years |

| | | |
|---|---|---|
| Lifetime Capacity Factor | | %, defined as Lifetime MWe-yrs delivered / (MWe capacity * Design Life), incl. outages |
| Major Planned Outages | | # days every # months (specify purpose, including refuelling) |
| Operation / Maintenance Human Resources | | # Staff in Operation / Maintenance Crew during Normal Operation |
| Reference Site Design | | n Units/Modules |
| Capacity to Electric Grid | | MWe (net to grid) |
| Non-electric Capacity | | e.g. MW(th) heat at x ºC, m3/day desalinated water, kg/day hydrogen, etc. |
| In-House Plant Consumption | | MWe |
| Plant Footprint | 256100 | m2 (rectangular building envelope) |
| Site Footprint | | m2 (fenced area) |
| Emergency Planning Zone | | km (radius) |
| Releases during Normal Operation | | TBq/yr (Noble Gases / Tritium Gas / Liquids) |
| Load Following Range and Speed | | x – 100%, % per minute |
| Seismic Design (SSE) | 0.2 | g (Safe-Shutdown Earthquake) |
| NSSS Operating Pressure (primary side) | 7 | MPa(abs), i.e. MPa(g)+0.1, at core outlet |
| NSSS Operating Pressure (secondary side) | 13.25 | MPa(abs), i.e. MPa(g)+0.1, at secondary side outlet |
| Primary Coolant Inventory (incl. pressurizer) | | kg |
| Nominal Coolant Flow Rate (primary) | 96 | kg/s |
| Nominal Coolant Flow Rate (secondary) | 186.39 | kg/s |
| Core Inlet Coolant Temperature | 250 | ºC |
| Core Outlet Coolant Temperature | 750 | ºC |

| | | |
|---|---|---|
| Available Tempeature as Process Heat Source | | ºC |
| NSSS Largest Component | RPV | e.g. RPV (empty), SG, Core Module (empty/fuelled), etc. |
| - NSSS Largest Component Length | 25000 | mm |
| - NSSS Largest Component Diameter | 5700 | mm |
| - NSSS Largest Component Thickness | | mm |
| - NSSS Largest Component Weight | 800 | tonne |
| Reactor Vessel Material | | e.g. SS304, SS316, SA508, 800H, Hastelloy N |
| Steam Generator Design | | e.g. Vertical/Horizontal, U-Tube/ Straight/Helical, cross/counter flow |
| Secondary Coolant Inventory | | kg |
| Pressurizer Design | | e.g. separate vessel, integral, steam or gas pressurised, etc. |
| Pressurizer Volume | | m3 / m3 (total / liquid) |
| Containment Type | | Dry (single/double), Dry/Wet Well, Inerted, etc. |
| Containment Volume | | m3 |
| Spent Fuel Pool Capacity and Total Volume | | Years of full-power operation / m3 |
| Non Electric Application | | - |
| Core Delta Temperature | 500 | ºC |
| **Fuel/Core** | | |
| Single Core Thermal Power | 500 | MW(th) |
| Refuelling Cycle | | months or “continuous” |
| Fuel Material | UO2 | e.g. UO2, MOX, UF4, UCO |
| Enrichment (avg./max.) | 8.5 | % |
| Average Neutron Energy | | eV |
| Fuel Cladding Material | TRISO | e.g. Zr-4, SS, TRISO, E-110, none |

| | | |
|---|---|---|
| Number of Fuel “Units” | | Specify as Assembly, Bundle, Plate, Sphere, or n/a |
| Weight of one Fuel Unit | | kg |
| Total Fissile Loading (initial) | | kg fissile material (specify isotopic and chemical composition) |
| % of fuel outside core during normal operation | | Applicable to online refuelling and molten salt reactors |
| Fraction of fresh-fuel fissile material used up at discharge | | % |
| Core Discharge Burnup | 90 | MWd/kgHM (heavy metal, eg U, Pu, Th) |
| Pin Burnup (max.) | | MWd/kgHM |
| Breeding/Conversion Ratio | | Fraction of fissile material bred in-situ over one fuel cycle or at equilibrium core |
| Reprocessing | | e.g. None, Batch, Continuous (FP polishing/actinide removal), etc. |
| Main Reactivity Control | | e.g. Rods, Boron Solution, Fuel Load, Temperature, Flow Rate, Reflectors |
| Solid Burnable Absorber | | e.g. Gd2O3 |
| Core Volume (active) | | m3 (used to calculate power density) |
| Fast Neutron Flux at Core Pressure Boundary | | n/(cm²*s) |
| Max. Fast Neutron Flux | | n/(cm²*s) |
| Core Control Rod Absorber | | - |
| Core Soluble Neutron Absorber | | - |
| **Safety Systems** | | |
| Number of Safety Trains | Active / Passive | % capacity of each train to fulfil safety function |
| - reactor shutdown | N/A | - / - / - |
| - core injection | N/A | - / - / - |
| - decay heat removal | N/A | - /- / - |

| | | |
|---|---|---|
| - containment isolation and cooling | N/A | - / - / - |
| - emergency AC supply (e.g. diesels) | N/A | - / - / - |
| DC Power Capacity (e.g. batteries) | | Hours |
| Events in which Immediate Operator Action is required | | e.g. any internal/external initiating events, none |
| Limiting (shortest) Subsequent Operator Action Time | | Hours (that are assumed when following EOPs) |
| Severe Accident Core Provisions | | e.g. no core melt, IVMR, Core Catcher, Core Dump Tank, MCCI |
| Core Damage Frequency (CDF) | | x/reactor-year (based on reference site and location) |
| Severe Accident Containment Provisions | | e.g., H2 ignitors, PARs, filtered venting etc. |
| Large Release Frequency (LRF) | | x/reactor-year (based on reference site and location) |
| **Overall Build Project Costs Estimate or Range (excluding Licensing, based on the Reference Design Site and Location)** | | |
| Construction Time (nth of a kind) | | Months from first concrete to criticality |
| Design, Project Mgmt. and Procurement Effort | | Person-years (PY) [DP&P] |
| Construction and Commissioning Effort | | PY [C&C] |
| Material and Equipment Overnight Capital Cost | | Million US$(2015) [M&E], if built in USA |
| Cost Breakdown | %[C&C]/%[M&E] | |
| - Site Development before first concrete | | (e.g. 25/10 )<br>( 30/40 )<br>( 20/25 )<br>( 20/10 )<br>( 5/15 )<br>( ----------)<br>(to add up to 100/100) |
| - Nuclear Island (NSSS) | | |
| - Conventional Island (Turbine and Cooling) | | |
| - Balance of Plant (BOP) | | |
| - Commissioning and First Fuel Loading | | |

| | | |
|---|---|---|
| Factory / On-Site split in [C&C] effort | | %/% of total [C&C] effort in PY (e.g., 60/40 ) |
| **Nuclear System** | | |
| System Steam Flow Rate | 186.39 | kg/s |
| System Steam Pressure | | MPa |
| System Steam Temperature | 566 | ºC |
| System Feedwater Flow Rate | | kg/s |
| System Feedwater Temperature | | ºC |
| **Reactor Core** | | |
| Active Core Height | 11 | m |
| Equivalent Core Diameter | | m |
| Average Linear Heat Rate | | kW/m |
| Average Fuel Power Density | 85.7 | kW/kgU |
| Average Core Power Density | | MW/m3 |
| Outer Diameter Of Fuel Rods | 60 | mm |

# 4. Plant Layout, Site Environment and Grid Integration

# SUMMARY FOR BOOKLET

**Plant layout**

The HTR-PM adopts a layout mode of two-module reactors coupled to one steam turbine in order to verify the feasibility and rationality of coupling a multitude of modules to one steam turbine. In addition, this kind of arrangement enables to test the sharing of the auxiliary systems.

General philosophy governing plant layout:

- The plant layout of the current design deals with the two modules which serve as the demonstration purpose
- The civil buildings include: reactor building, turbine-generator building, helium storage and supply building, spent fuel storage building, waste treatment building, waste storage building and evaporation pool, fire fighting water supply tank.

The figure shows the arrangement of the reactor building and the turbine generator building.

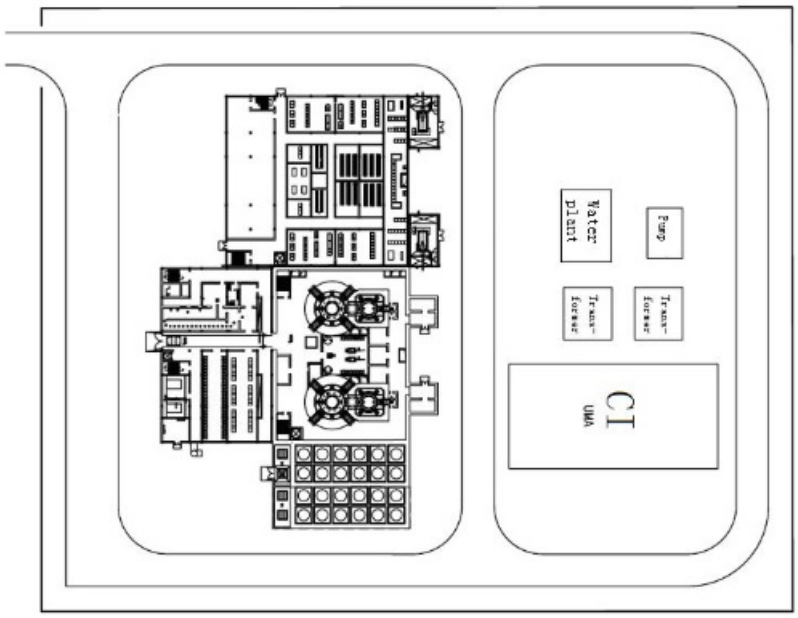


Fig - 2

**4.1 Site Requirements during Construction**
**4.2 Site Considerations during Operation**
**4.3 Grid Integration**

# 5. Technical NSSS/Power Conversion System Designn

# SUMMARY FOR BOOKLET

## 5.1 Primary Circuit

**Main Characteristics of the Primary Circuit**

HTGR uses helium as coolant and graphite as moderator as well as structural material. A single-zone core design was adopted, in which the spherical fuel elements are placed. The cylindrical active reactor core has an outer diameter of 3.0 meters and effective height of 11.0 meters. The effective core volume is 77.8m3 . In equilibrium core, the reactor core contains 420,000 fuel elements.

The reflectors include top, side and bottom graphite reflectors. Graphite reflectors are made from graphite blocks, which are constructed layers by layers. In the circumferential direction, every lay of graphite reflectors consists of 30 graphite blocks. Inside the side graphite reflector blocks, corresponding numbers of channels are designed for reactor shutdown systems and for helium flow. The bottom reflector takes a cone shape at the upper surface to facilitate the pebble flow. Inside the bottom reflector, channels are designed for the flow of hot helium. The hot helium chamber is designed in the bottom reflector area, where hot helium of different outlet temperatures is mixed and then directed to the hot gas duct in which the hot helium flows

to the Steam Generator. In the centre of the bottom reflector is the fuel discharge tube.

The primary helium coolant works at the pressure of 7.0MPa. The rated mass flow rate is 96kg/s. Helium coolant enters the reactor in the bottom area inside the pressure vessel with an inlet temperature of 250ºC. Helium coolant flows upward in the side reflector channels to the top reflector level where it reverses the flow direction and flow into the pebble bed in a downward flow pattern. Bypass flows are introduced into the fuel discharge tubes to cool the fuel elements there and into the control rod channels for control rods cooling. Helium is heated up in the active reactor core and then is mixed to the average outlet temperature of 750ºC and then flows to the Steam Generator.

The reactor core and the steam generator are housed in two steel pressure vessels which are connected by a connecting vessel. Inside the connecting vessel, the hot gas duct is designed. All the pressure retaining components, which comprise the primary pressure boundary, are in touch with the cold helium of the reactor inlet temperature. The primary pressure boundary consists of the reactor pressure vessel (RPV), the steam generator pressure vessel (SGPV) and the hot gas duct pressure vessel (HDPV), which all are housed in a concrete shielding cavity as shown in the figure 3.

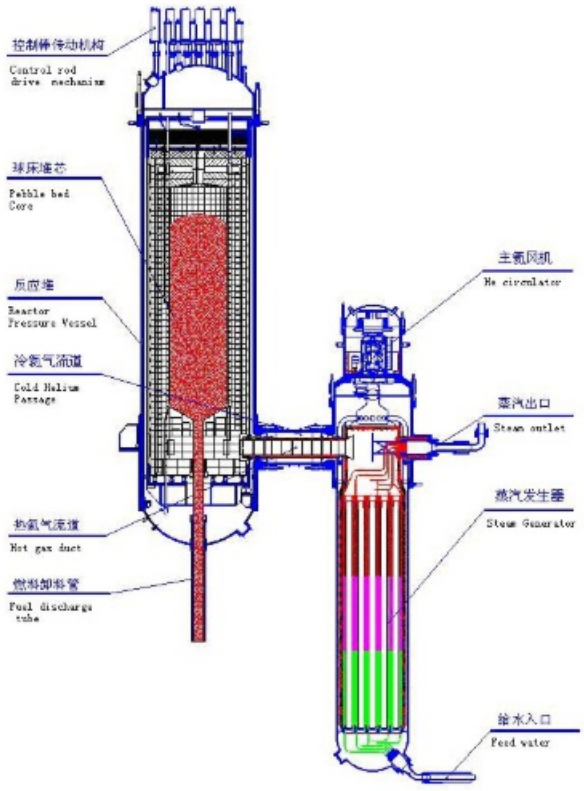


Fig. 3 - HTR-PM primary loop

**Primary circuit component description**

The reactor internals consist of graphitic, carbonic and metallic components. The graphitic internals act primarily as the neutron reflector; in addition they provide the means to be able to arrange the helium flow channels and the absorber borings. The main function of the metallic internals is to support the graphite and carbon internals along with the ceramic structure of the pebble-bed core, and to pass various loads and forces to the reactor pressure vessel.

The main helium blower, designed as a vertical structure, is installed on the top of the steam generator inside the steam generator pressure vessel [SGPV]. The electric motor is mounted on an insertable

assembly; the motor is driven by the converter outside of the pressure vessel. A magnetic bearing system is envisaged.

The steam generator consists of 19 separate helical tube assemblies; each assembly has 5 layers and includes 35 helical tubes. To ensure two-phase flow stability, throttling apertures are installed at the entrance of all helical tubes. The assembly-type design of the steam generator uses the experiences from the steam generator employed in the HTR-10. In-service inspection is possible. For full verification of the steam generator assembly full scale testing will be performed.

## 5.2 Reactor Core and Fuel

### Fuel Design

Fuel elements are spherical ones. Every fuel element contains 7g heavy metal. The enrichment of U-235 is 8.5%. Uranium kernels of about 0.5mm diameter are coated by three layers of pyro-carbon and one layer of silicon carbon. Coated fuel particles are dispersed in matrix graphite which is 5cm in diameter. Surrounding the fuel containing graphite matrix is a 5mm thick graphite layer. Figure 4 shows the fuel cross sections. The key design data of fuel elements are given below:

Fuel Element:

| | |
|---|---|
| Diameter of ball | 6.0 cm |
| Diameter of fuel zone | 5.0 cm |
| Heavy metal (uranium) loading (weight) per ball | 7.0 g |
| Enrichment of 235U (weight) | 8.5 % |

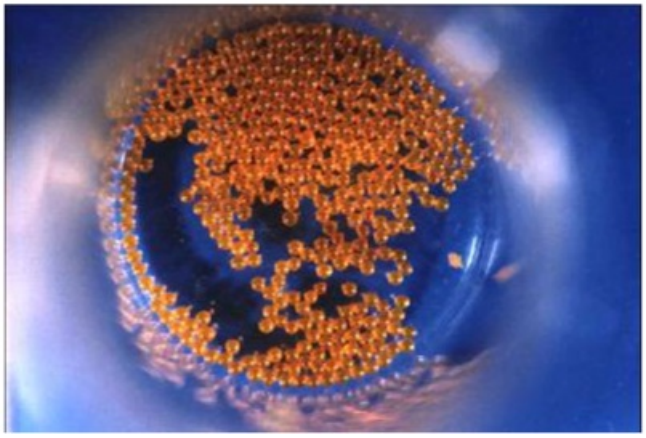

Fig. 4 - UO2 kernels



Fig. 5 - Spherical Fuel Elements

## 5.3 Fuel Handling

### Fuel handling system

The operation mode adopts continuous fuel loading and discharging: the fuel elements drop into the reactor core from the central fuel loading tube and are discharge through a fuel extraction pipe at the core bottom. Subsequently, the discharged fuel elements pass the burn-up measurement facility one by one. Depending on their state of burn-up they will either be discharged and transported into the spent fuel storage tank when having reached their design burn-up, or they will be re-inserted into the reactor to pass the core once again. The power distribution of the core depends on the number of passes one chooses. Obviously, the higher the number of passes is chosen the flatter will be the power distribution. This is favorable when regarding fuel element temperatures during accident conditions. On the other hand, a high number of fuel passes complicates the fuel handling devices as well as the complexity of the burn-up measurement facility.

## 5.4 Reactor Protection
## 5.5 Secondary Side

### Auxiliary systems

As the main auxiliary system to the NSSS (Nuclear Steam Supply System), the helium purification system aims to purify the primary coolant and to eliminate impurities such as H2O, O2, CO, CO2, H2, N2, CH4, etc. The system comprises sub-systems and components with functions respectively of helium purification, regeneration of purifier, oxygen supply and storage, liquid nitrogen supply and storage, helium supply and storage, primary circuit vacuum, etc.

### Description of turbine-generator systems

Steam turbine

Table 3 :

| Type | N211-13.24/566 |
|---|---|
| Rated output power | 211MWe |
| Rated speed | 3000rpm |

| | |
|---|---|
| Heat input rate from NSSS | 3000rpm |
| Rated inlet steam pressure | 13.24MWe |
| Steam flow rate | 671t/h |
| Rated inlet steam temperature | 566°C |
| Rated discharge pressure | 4.5kPa(a) |
| Discharge pressure in summer | 9.6kPa(a) |
| Rated cooling water temperature | 16°C |

Generator

Table 4 :

| | |
|---|---|
| Rated output power | 211MWe |
| Rated voltage | 18kV |
| Power factor | 0.85 |
| Rated frequency | 50Hz |
| Efficiency | 98.7% |
| Cooling method | Air |
| Excitation method | Static |

Condenser

Table 5 :

| | |
|---|---|
| Type | Shell and tube condenser |
| Cooling area | 12000m2 |
| Design pressure for shell | 0.098MPa(a) |
| Design pressure for tub | 0.4MPa(a |
| Exhaust back pressure | 4.5kPa |
| Tube material | Titanium |
| Water recirculation rate | 27711.4t/h |
| Design inlet water temperature | 16°C |
| Maximum inlet water temperature | 33°C |

### 5.6 Containment/Confinement
### 5.7 Electrical, I&C and Human Interface

Overall monitoring and controlling function is performed via one integrated distributed control system (DCS) covering the operations of two reactors, two steam generators and pertinent BOP components. One main control room is responsible for control of reactors, electricity and mechanical operations. Visual display units (VDU) are adopted for monitoring of the unit. Both control console and graphic panel are designed in the main control room, with the first responsible for display via VDU and some emergence operation, and the last in charge of report on the basic safety and operation status as the supplementary to the control console. Both reactors and the steam generator are controlled independently, with a coordinating supervisory control module placed on the higher hierarchical level, for dynamic distribution of power outputs of the two reactors to keep the energy balance, according to the grid demand and the operation status of the reactors.

Independent reactor protection system and post-accident monitoring system are designed respectively for the two reactors. The two systems are to ensure the protection and safety monitoring performance upon the failure of the DCS. Redundant protection measures are designed for multi-stage protection of the main components of the plant.

The figure shows the layout of the control system.

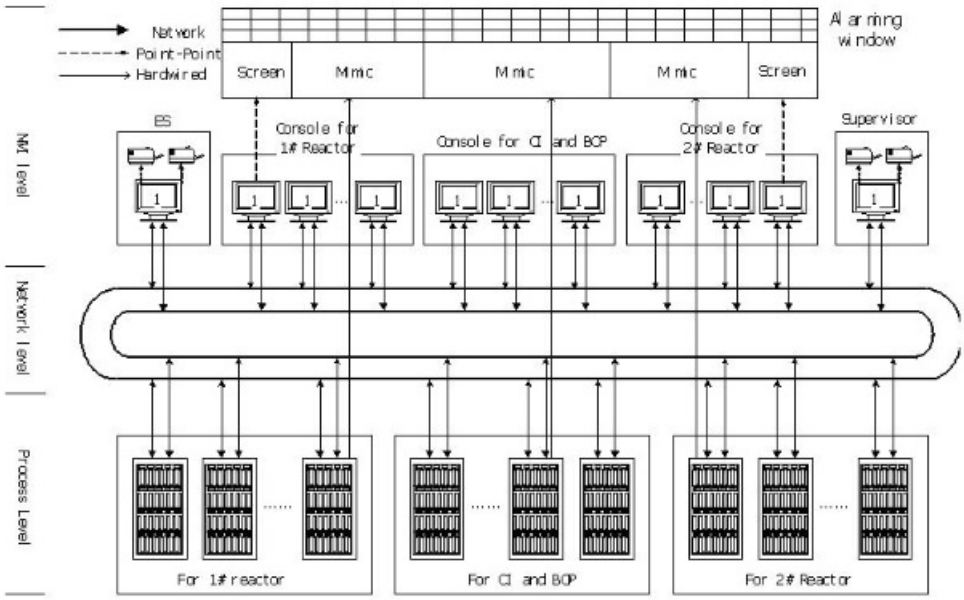


Figure 6

### 5.8 Unique Technical Design Features (if any)

# 6. Technology Readiness

# SUMMARY FOR BOOKLET

**Examples of energy systems with NPPs of this kind**

There is currently a lot of interest worldwide in the development and deployment of modular high temperature gas cooled reactors. Besides in China, similar development and design activities are also underway in France, Japan, Russia, South Africa, USA, etc[5-7]. The main differences among different programmes lie in the fuel technology (pebble fuel versus prismatic fuel, uranium versus plutonium) and power conversion technology (steam turbine versus gas turbine)

### 6.1 Deployed Reactors
### 6.2 Reactors under Licensing Review
### 6.3 Reactors in the Design Stage

# 7. Safety Concepts

# SUMMARY FOR BOOKLET

## 7.1 Safety Philosophy and Implementation

**Description of safety concept**

The safety design philosophy of the HTR-PM is to realize required high level of safety while at the same time to maximum simplify the design for systems that are required only for safety purposes. Emergency measures outside the plant boundary should be made technically not necessary or to a minimum level. The HTR-PM safety design is heavily based on inherent features and passive safety systems, while still adhering to the defense-in-depth principles. Following three main features characterize the basic safety concept of the HTR-PM design.

- Retention of radioactivity materials is achieved through multi-barriers with heavy emphasis on the fuel elements (the first barrier) also for accidental conditions. The fuel elements with coated particles serve as the first barrier. Every fuel kernel of about 0.5mm diameter is coated with three layers of pyro-carbon and one silicon carbon (SiC) layer. A large number of coated particles are dispersed in matrix graphite of 5cm in diameter to form the fuel containing part of a fuel element, which in turn is protected by a 0.5cm thick fuel-free graphite layer. The fuel elements used for HTR-PM have been demonstrated to be capable of retaining fission products within the coated particles under temperatures of 1,620ºC which is not expected for any plausible accident scenarios. The second barrier is the primary pressure boundary which consists of the pressure vessel units of the primary components. The third barrier is the reactor building and some additional auxiliary buildings which house primary helium containing components.
- Decay heat shall be removed inherently under accident conditions. Under accident conditions, the primary helium circulator shall be stopped. Because of the low power density and the large heat capacity of the graphite structures, the decay heat in the fuel elements can dissipate to the outside of the reactor pressure vessel by means of heat conduction and radiation within the core internal structures, without leading to unacceptable fuel temperature limits.
- Overall negative temperature reactivity feedback is assured under all conditions. The reactor nuclear design assures that the temperature reactivity coefficients of fuel and moderator are always negative under all operating and accident conditions. This, together with the protection action of stopping the

primary helium blower under accidents, will lead to reactor automatic shutdown in accident cases.

The HTR-PM design makes good use of the above safety features. Because the reactor safety is very much characterized by the inherent safety features, the plant engineered safety systems are kept minimum, so that the plant safety and safety management is simplified to very high extent. It is also clear and transparent. When accidents occur, a very limited number of reactor protection actions shall be called upon by the reactor protection system. No or very limited actions through any systems or human interventions are foreseen after the limited reactor protection actions are activated. The limited reactor protection actions shall be to trip the reactor and the helium circulator, to isolate the primary and secondary systems. When there is large leak or rapture of steam generator heat exchange tubes, a water discharge system is designed to minimize the amount of water ingress into the reactor core.

Another feature of the HTR-PM design is the long time period of accident progression due to the large heat capacity of fuel elements and graphite reactor internal structures. It requires days for the fuel elements to reach the maximum temperature when the coolant is completely lost.

The safety design and operation of an HTR-PM plant follows the defence-in-depth principles which are well formulated in IAEA safety standards. The first three levels of defence-in-depth apply for the HTR-PM design and operation, namely, Level 1 - Prevention of abnormal operation and failure, Level 2 - Control of abnormal operation and detection of failure, and Level 3 - Control of accidents within the design basis. For Level 4 of defence-in-depth (Mitigation of radiological consequences of significant release of radioactive materials), the mitigation measures are made minimum, as accident consequences are limited with extremely high level of confidence at the first three levels of defence-in-depth. For Level 5 of defence-in-depth (off-site emergency responses), the HTR-PM design is aimed at making such off-site emergency response measures technically not necessary.

Accidents classification and safety analysis of the HTR-PM design will be performed according to requirements of standards, and the design, licensing and operation experience of the HTR-10 test reactor. For the HTR-PM plant, the most significant design basis accident is the complete loss of primary helium coolant. This accident has been analysed. In such an accident scenario, no any additional cooling systems are designed for cooling the reactor core. The decay heat in fuel elements shall dissipate to the outside of the pressure vessel primarily by means of heat conduction and radiation within the reactor core internals. The maximum fuel temperature during this accident scenario is the highest and most challenging for the fuel, therefore this accident scenario is the most critical one for the HTR-PM design. In the case of HTR-PM, the maximum fuel temperature will be less than 1620°C for any conceivable accident.

### 7.2 Transient/Accident Behaviour

# 8. Fuel and Fuel Cycle

# SUMMARY FOR BOOKLET

### 8.1 Fuel Cycle Options

**Standard Fuel cycle**

The current HTR-PM design uses Low Enriched Uranium (LEU) as nuclear fuel. Fissile material (U-235) is enriched to 8.5% for fresh fuel elements. The fuel cycle, which is currently foreseen, is the Once-Through cycle. In the reactor operation, spherical fuel elements go through the reactor core in a multi-pass mode before they reach the discharge burn-up and are discharged from the core into storage tanks. The average discharge burn-up is 90,000MWd/tU.

**Alternative Fuel options**

The currently foreseen fuel cycle for the HTR-PM technology is LEU uranium-plutonium Once-Through cycle. In comparison to the existing water cooled reactor technologies, it uses the uranium resources more efficiently. If necessary, the spent fuel can be reprocessed to recover the remaining fissile materials in the spent fuel in order to better use the fissile material resources. The HTR-PM technology, which is a graphite moderated, helium cooled reactor system, is flexible in fuel cycle technologies. It is also able to use the thorium-uranium fuel cycle. Considering the large amount of the thorium resources in China, the HTR-PM technology has good features in terms of sustainability.

## 8.2 Resource Use Optimization

**Spent fuel and waste management**

The proposed option for spent fuel storage and disposal is to store the spent fuels at the plant site for certain period, and then to store them at a centralized storage before they go to final disposal.

The HTR-PM fuel elements are of good capability of retaining radioactive materials generated from the fission process. The graphite-helium system does not have much activation problem. Primary coolant of helium is of low radioactivity level and is constantly purified. During normal operation, doses to operational staff and radioactive releases to environment are very low and are minimized. The amount of liquid and solid radioactive wastes generated during plant operation is extremely small and are well managed. Therefore, the features of the HTR-PM technology with regard to adverse environmental impact are remarkably favorable.

**Spent nuclear fuel and disposal plans**

As was stated, the currently foreseen fuel cycle is the once through cycle. The spent fuel can eventually be reprocessed in case fuel cycle strategies would change to recover the uranium and plutonium fissile material in the spend fuel. There has been much development on the reprocessing technology. The first steps would be to remove the matrix graphite in the fuel elements and the pyro-carbon and silicon carbon coating layers. The remaining spent fuel materials can be reprocessed using the existing technologies for current water reactor fuels.

The proposed option for spent fuel storage and disposal is to store the spent fuels at the plant site for certain period, and then to store them at a centralized storage before they go to final disposal. For the moment, national strategies for the management of spent fuel elements with regards to storage and final disposal need to be formulated yet. These strategies and the implementation will depend heavily on the scale of eventual capacities of the constructed plants. For the first demonstration plant, the spent fuel elements of the whole plant life are planned to be interim stored at the plant site.

## 8.3 Unique Fuel/Fuel Cycle Design Features

# 9. Safeguard & Physical Security

# SUMMARY FOR BOOKLET

## 9.1 Safeguards

**Proliferation resistance**

Some of the important technical features of HTR-PM, which reduce the attractiveness of its spent nuclear fuel material for use in nuclear weapon programmes, include:

- The volume of new and spent fuel is rather large, and the inspection and verification should be easy
- The burn-up level of the discharged fuel is as high as 90,000MWd/tU, less fissile materials are left in spent fuel and they are of much less interest to weapon grade fissile materials.
- The currently adopted fuel cycle is the once-through cycle using low enriched uranium fuel, no reprocessing is foreseen.
- It requires sophisticated and costly reprocessing to get any fissile materials from the spent fuel elements.

## 9.2 Security

**Safety and security (physical protection)**

The safety of an HTR-PM plant is realized in such a way that the nuclear safety does not heavily rely on peripheral engineered safety systems. Radioactive materials in the reactor core will remain retained in the fuel elements as long as the reactor structures remain physically protected. The reactor itself is housed in a very thick concrete cavity inside the reactor building. The reactor building and the primary concrete cavity form robust barriers against sabotage attacks. The reactor safety features also make the reactor itself less sensitive to conceivable internal sabotage actions. Such robust technical features make the safety of an HTR-PM plant much less vulnerable to sabotage actions. Notwithstanding these, routine technical measures required by applicable standards are foreseen for physical protection purposes.

## 9.3 Unique Safeguards and/or Security Features

# 10. Project Delivery & Economics

# SUMMARY FOR BOOKLET

## 10.1 Project Preparation and Negotiation

**Development status of technologies relevant to the NPP**

The technical research for the HTR-PM began in 2001. The main technical scheme of the nuclear island was finally fixed in 2006.

HTR-PM adopts the proven and mature technology as much as possible. Anyway, in order to ensure the operation reliability and to demonstrate the safety, a large scale of research and experiment are carried out.

The key technology research and engineering verifications are carried out according to elaborate plans. An HTGR engineering laboratory and a large helium engineering testing loop are under construction at INET. Here, the engineering verification experiments for the main component prototypes will be performed on large test rigs in full scale.

According to the requirements of the HTR-PM project, a fuel production line will be built soon having a capacity of producing 300,000 spherical fuel elements per year.

**Deployment status and planned schedule**

The expected project construction period from pouring the first tank of concrete to generating electricity for the grid is scheduled to be 50 months. Although the workload of building, construction and installation is relatively clear and straight forward, the project schedule, nevertheless, leaves certain time margins allowing for possible uncertainties. The current plan aims for feeding electricity to the national power grid in 2013.

## 10.2 Construction and Commissioning
## 10.3 Operation and Maintenance

**Plant performance**

The HTR-PM will realize the following safety features:

1. The radioactive inventory in the primary helium coolant is very small when the reactors are working at normal operation conditions. Even if this limited amount of radioactivity would be released into the environment following an accident, there is no need to take any emergency measures.
2. For any reactivity accident or for a loss of coolant accident the rise of the fuel element temperature will not cause a significant additional release of radioactive substances from the fuel elements.
3. The consequences of water or air ingress accidents depend on the quantity of such ingresses. The ingress processes and the associated chemical reactions are slow, and can readily be terminated within several dozens of hours (or even some days) by taking very simple actions.

The nuclear safety goal of the HTR-PM can be summarized follows: The consequences of all conceivable accidents will not result in significant offsite radioactive impacts. The plant is designed to meet the safety target of Generation-IV nuclear energy systems which stipulates: "eliminate the need for offsite emergency measures". The same viewpoint is put down by IAEA in its report No.NS-R-1 “ SAFETY OF NUCLEAR POWER PLANTS: DESIGN”. Here it is expressively stated that “ An essential objective is that the need for external intervention measures may be limited or even eliminated in technical terms, although such measures may still be required by national authorities.”

**Operating modes**

The HTR-PM plant is designed primarily for base load operation, but it can also be operated for load following.

**References**

1) Yuanhui Xu, The Chinese Point and Status, Proceedings of the Conference on High Temperature Reactors (HTR-2002), Petten, NL, April 22-24, 2002

2) Dazhong Wang, Yingyun Lu, Roles and prospect of nuclear power in China's energy supply strategy, Nuclear Engineering and Design, v218(2002), p3

3) Yuanhui Xu, Kaifen Zuo, Overview of the 10 MW high temperature gas cooled reactor-test module project, Nuclear Engineering and Design, v218(2002), p13

4) Zongxin Wu, Dengcai Lin and Daxin Zhong, The design features of the HTR-10, Nuclear Engineering and Design, v218(2002), p25-32

5) H.L. Brey, Development history of the gas turbine modular high temperature reactor, IAEA-TECDOC-1238, Gas Turbine Power Conversion Systems for Modular HTGRs, p21

6) Y. Muto, S. Ishiyama, S, Shiozawa, Selection of JAERI's HTGR-GT concept, IAEA-TECDOC-1238, Gas Turbine Power Conversion Systems for Modular HTGRs, p53

7) K.N. Pradeep Kumar, A. Tourlidakis, P. Pilidis, Performance review: PBMR closed cycle gas turbine power plant. IAEA-TECDOC-1238, Gas Turbine Power Conversion Systems for Modular HTGRs, p99

8) Zuoyi Zhang,Suyuan Yu, Future HTGR developments in China after the criticality of the HTR-10, Nuclear Engineering and Design, v218(2002), 249–257

9) Zuoyi Zhang, Zongxin Wu,Yuliang Sun, Fu Li. Design aspects of the Chinese modular high-temperature gas-cooled reactor HTR-PM, Nuclear Engineering and Design , v236( 2006), 485-490

10) Zuoyi Zhang, Yuliang Sun, Economic potential of modular reactor nuclear power plants based on Chinese HTR-PM project, Nuclear Engineering and Design, v237(2007), 2265-2274

11) Zuoyi Zhang, Zongxin Wu, Dazhong Wang, Yuanhui Xu, Yuliang Sun, Fu Li, Yujie Dong, Current Status and Technical Description of the Chinese 2´250MWth HTR-PM Demonstration Plant, Nuclear Engineering and Design, v239 (2009), p1212–1219