Status Report – LFR-AS-200 (Hydromine Nuclear Energy S. à r. l.) Luxembourg DATE (2019/11/29)

This reactor design is a new concept with a projected earliest deployment (start of construction) by 2030.

The reference plant has a net power output of 200 MWe.

INTRODUCTION

LF-SMR

Distinguishing features. The LFR-AS-200 is an innovative reactor cooled by molten lead; AS stands for Amphora-Shaped, referring to the shape of the inner vessel and 200 is the electrical power in MW. The embodied innovations exploit the lead properties and enhance the potential for future deployment, owing to plant simplification and compactness, while behaving passively safe; it is quite distinct from any previous LFR designs.

Target applications. The absence of intermediate loops, the primary system specific volume of less than 1 m^3/MWe and the compact reactor building are key-factors for competitive kWh cost. Market application is energy production with use of stockpiled Pu and perspective recycle of minor actinides without burden of long-lived transuranics in the waste. The breeding ratio is 0.9 without blanket assemblies and can be reduced with core design adaptation where required.

Overall design philosophy. The LFR-AS-200 is a pool-type fast reactor. Main primary components are six innovative spiral-tube steam generators (STSG), six mechanical pumps, flag-type control rods and three + three dip coolers belonging to two diverse, redundant decay heat removal systems, fuel assemblies with stem extended above the lead free level and hung by their heads. There is no need of in-vessel refueling machine nor of intermediate loops. The risk of important primary system pressurization, in case of the steam generator tube rupture accident, is deterministically eliminated by several, special provisions: among them, water and steam collectors located outside the RV and short STSG partially raised above the lead free level of the cold collector.

Development Milestones

2014 Completion of the conceptual design.
2019 Preliminary design ongoing.

Design organization **e-mail contact**:, lcinotti@hydromineinc.com, pbriger@hydromineinc.com

Links to designer/vendor homepage: www.hydromineinc.com.

At present there is no licensing procedure in progress

Table 1: ARIS Category Fields (see also Spreadsheet "Categories") for Booklet

ARIS Category	Input	Select from
Current/Intended Purpose	Electric- Prototype	Commercial – Electric/Non-electric, Prototype/FOAK, , Demonstration, Experimental
Main Intended Application (once commercial)	Baseload Non-electric (Heat for industrial processes)	Baseload, Dispatchable, Off-grid/Remote, Mobile/Propulsion, Non-electric (specify)
Reference Location	On Coast, Inland	On Coast, Inland, Below-Ground, Floating-Fixed, Marine-Mobile, Submerged-Fixed (Other-specify)
Reference Site Design (reactor units per site)	Single Unit (Prototype), Dual or Multi-Unit (n^{th})	Single Unit, Dual Unit, Multiple Unit (# units)
Reactor Core Size (1 core)	Small (480 MWth)	Small (<1000 MWth), Medium (1000-3000 MWth), Large (>3000 MWth)
Reactor Type	LFR	PWR, BWR, HWR, SCWR, GCR, GFR, SFR, LFR, MSR, ADS
Core Coolant	Pb	H_2O, D_2O, He, CO_2, Na, Pb, PbBi, Molten Salts, (Other-specify)
Neutron Moderator	None	H_2O, D_2O, Graphite, None, (Other-specify)
NSSS Layout	Pool-type	Loop-type (# loops), Direct-cycle, Semi-integral, Integral, Pool-type
Primary Circulation	Forced (6 pumps)	Forced (# pumps), Natural
Thermodynamic Cycle	Rankine	Rankine, Brayton, Combined-Cycle (direct/indirect)
Secondary Side Fluid	H_2O	H_2O, He, CO_2, Na, Pb, PbBi, Molten Salts, (Other-specify)
Fuel Form	Extended-stem Fuel Assembly/Bundle	Fuel Assembly/Bundle, Coated Sphere, Plate, Prismatic, Contained Liquid, Liquid Fuel/Coolant
Fuel Lattice Shape	Hexagonal FA and triangular pin pitch	Square, Hexagonal, Triangular, Cylindrical, Spherical, Other, n/a
Rods/Pins per Fuel Assembly/Bundle	390	#, n/a
Fuel Material Type	Oxide	Oxide, Nitride, Carbide, Metal, Molten Salt, (Other-specify)
Design Status	Conceptual,	Conceptual, Detailed, Final (with secure suppliers)
Licensing Status	No licensing procedure initiated	DCR, GDR, PSAR, FSAR, Design Licensed (in Country), Under Construction (# units), In Operation (# units)

Table 2: ARIS Parameter Fields (see also Spreadsheet "Data") for Booklet

ARIS Parameter	Value	Units or Examples
Plant Infrastructure		
Design Life	60 years	years
Lifetime Capacity Factor	95%	%, defined as Lifetime MWe-yrs delivered / (MWe capacity * Design Life), incl. outages
Major Planned Outages	25 days/17 months for refuelling, ISI, turbine maintenance	# days every # months (specify purpose, including refuelling)
Operation / Maintenance Human Resources		# Staff in Operation / Maintenance Crew during Normal Operation
Reference Site Design	2 Units / 2 Modules	n Units/Modules
Capacity to Electric Grid	200 MWe (net to grid) for Prototype, 400/800 for series	MWe (net to grid)
Non-electric Capacity	Not investigated-Site dependent.	e.g. MWth heat at x ºC, m3/day desalinated water, kg/day hydrogen, etc.
In-House Plant Consumption	12 MWe	MWe
Plant Footprint	1100 m^2 (rectangular building)	m^2 (rectangular building envelope)
Site Footprint		m^2 (fenced area)
Emergency Planning Zone	Target: elimination of "Emergency Planning Zone"	km (radius)
Releases during Normal Operation	To be defined	TBq/yr (Noble Gases / Tritium Gas / Liquids)
Load Following Range and Speed	20%-100%, at 110% for max 6 hours Speed to be defined	x – 100%, % per minute
Seismic Design (SSE)	0.3g	g (Safe-Shutdown Earthquake)
NSSS Operating Pressure (primary/secondary)	0.01 MPa(g) at cover gas / 18 MPa	MPa(abs), i.e. MPa(g)+0.1, at core/secondary outlets
Primary Coolant Inventory	1290000 kg	kg
Nominal Coolant Flow Rate (primary/secondary)	29300 kg/s / 282 kg/s	kg/s
Core Inlet / Outlet Coolant Temperature	420°C / 530°C	ºC / ºC
Available Temperature as Process Heat Source	350°C	ºC
NSSS Largest Component	RPV	e.g. RPV (empty), SG, Core Module (empty/fuelled), etc.

ARIS Parameter	Value	Units or Examples
- dimensions	6,2 m length/ 6 m current-6,3 m at support flange /42000kg	m (length) / m (diameter) / kg (transport weight)
Reactor Vessel Material	SS316LN	e.g. SS304, SS316, SA508, 800H, Hastelloy N
Steam Generator Design	Plane-Spiral-Tube, cross flow	e.g. Vertical/Horizontal, U-Tube/ Straight/Helical, cross/counter flow
Secondary Coolant Inventory		kg
Pressurizer Design	n. a.	e.g. separate vessel, integral, steam or gas pressurized, etc.
Pressurizer Volume	n. a.	m^3 / m^3 (total / liquid)
Containment Type and Total Volume	Dry / single	Dry (single/double), Dry/Wet Well, Inerted, etc. / m^3
Spent Fuel Pool Capacity and Total Volume	5 years full power operation + a full core /150 m^3	years of full-power operation / m^3
Fuel/Core		
Single Core Thermal Power	480 MWth	MWth
Refuelling Cycle	16 months	months or "continuous"
Fuel Material	MOX	e.g. UO_2, MOX, UF_4, UCO
Enrichment (avg./max.)	19% / 23,2% in Pu	%
Average Neutron Energy	450 keV (average neutron energy causing fission)	eV
Fuel Cladding Material	Austenitic stainless steel, "15-15Ti"	e.g. Zr-4, SS, TRISO, E-110, none
Number of Fuel "Units"	61 Assemblies	specify as Assembly, Bundle, Plate, Sphere, or n/a
Weight of one Fuel Unit	1000 kg	kg
Total Fissile Loading (initial)	2150 kg of Pu in form of MOX ^{238}Pu (2.33%) ^{239}Pu (56.87%) ^{240}Pu (26.99%) ^{241}Pu (6.1%) ^{242}Pu (7.69%)	kg fissile material (specify isotopic and chemical composition)
% of fuel outside core during normal operation	n. a.	applicable to online refuelling and molten salt reactors
Fraction of fresh-fuel fissile material used up at discharge	Balance of Pu -5.6% Balance of U - 12%	%
Core Discharge Burnup	100MWd/kgHM	MWd/kgHM (heavy metal, eg U, Pu, Th)

ARIS Parameter	Value	Units or Examples
Pin Burnup (max.)	122MWd/kgHM	MWd/kgHM
Breeding Ratio	90%	Fraction of fissile material bred in-situ over one fuel cycle or at equilibrium core
Reprocessing	Batch	e.g. None, Batch, Continuous (FP polishing/actinide removal), etc.
Main Reactivity Control	Rods	e.g. Rods, Boron Solution, Fuel Load, Temperature, Flow Rate, Reflectors
Solid Burnable Absorber	B_4C enriched in boron-10 90.0 at. %	e.g. Gd_2O_3,
Core Volume (active)	3.6 m^3	m^3 (used to calculate power density)
Fast Neutron Flux at Core Pressure Boundary	1.1E+17 n/m^2-s (inner vessel at core midplane) 2.0 E+15 n/m^2-s (main vessel at core midplane) (E > 0.1 MeV)	N/m^2-s
Max. Fast Neutron Flux	1.3 E+19 n/m^2-s (E > 0.1 MeV)	N/m^2-s
Safety Systems		
Number of Safety Trains	Active / Passive	% capacity of each train to fulfil safety function
- reactor shutdown	200% / 100%	/
- core injection	n. a.	/
- decay heat removal	150%/150%	/
- containment isolation	Double valves	/
- emergency AC supply (e.g. diesels)	No diesels	/
DC Power Capacity (e.g. batteries)	72 hours	hours
Events in which ***Immediate Operator Action*** is required	none	e.g. any internal/external initiating events, none
Limiting (shortest) ***Subsequent Operator Action*** Time	3 hours	hours (that are assumed when following EOPs)
Severe Accident Core Provisions	No core melt	e.g. no core melt, IVMR, Core Catcher, Core Dump Tank, MCCI
Core Damage Frequency (CDF)		x / reactor-year (based on reference site and location)
Severe Accident Containment Provisions	Filtering	e.g. H_2 ignitors, PARs, filtered venting, etc.
Large Release Frequency (LRF)	Objective: no large release (no emergency zone)	x / reactor-year (based on reference site and location)

ARIS Parameter	Value	Units or Examples
Overall Build Project Costs Estimate or Range (excluding Licensing, based on the Reference Design Site and Location)		
Construction Time (n^{th} of a kind)	32 months	months from first concrete to criticality
Design, Project Mgmt. and Procurement Effort		person-years (PY) [DP&P]
Construction and Commissioning Effort		PY [C&C]
Material and Equipment Overnight Capital Cost		Million US$(2015) [M&E], if built in USA
Cost Breakdown	%[C&C] / %[M&E]	
- Site Development before first concrete	/	(e.g. 25 / 10)
- Nuclear Island (NSSS)	/	(30 / 40)
- Conventional Island (Turbine and Cooling)	/	(20 / 25)
- Balance of Plant (BOP)	/	(20 / 10)
- Commissioning and First Fuel Loading	/	(5 / 15)
		(----------)
		(to add up to 100 / 100)
Factory / On-Site split in [C&C] effort	/	% / % of total [C&C] effort in PY (e.g. 60 / 40)

1. *Plant Layout, Site Environment and Grid Integration*

SUMMARY FOR BOOKLET

The availability of cooling water gives preference to sites near the sea, rivers or lakes. The installation of a dry condenser will be reserved for areas without water availability. The water supply is not necessary for the DHR systems: the first DHR system uses only air as the heat sink and the second DHR system uses storage water, whose steam is vented in the short term into the atmosphere and in the long term is condensed by air coolers for unlimited-time availability.
The FOAK will be a single unit, while the following plants will consist of one or more modules each equipped with two reactors.
The two reactor modules are installed in a common reactor building. Each reactor is provided with common equipment for fuel loading and unloading, with a common spent fuel pool, a common control room and a common turbine-generator. ISI equipment, warehouse area, maintenance shop, circulating water & service water pump house, fire brigade equipment, gate house and security fence are in common in sites with multiple plant units.

1.1. Site Requirements during Construction

For a SMR to be commercially sound, it should be adaptable to the widest possible range of sites, on coast or inland. The reference plant has the reactor below grade with the reactor roof at ground level, this is possible with a limited excavation considering the reduced height of the reactor vessel. The reactor power is adequate to consider not only electricity production, but also use of process heat. This function will probably require installation in densely populated areas. In this case a completely below grade installation is not to be excluded, but has not yet been studied.

For the construction phase, the concept is based on the possibility of prefabricated parts which, can be transported by land, river or air and assembled on site relatively easily. Transport is facilitated by the small size and weight of the components. The reactor presents in fact a double modularity related to (i) the small power of the reactor and (ii) the modular concept of the design itself which features six steam generator and six primary pumps. The most voluminous component is the reactor vessel: 6,2 m in height, 6 m diameter with local extension to 6,3 m at the support flange. The heaviest component to transport is the reactor roof to which the inner vessel is welded with associated neutron shielding and barrel. The total weight of this transport is 90 tons. The steam generators are very compact units of only 12 tons.

The reference plant is constituted by one or more modules, each made of by two reactors with the pool for spent fuel installed in the same reactor building protected from aircraft impact. The two reactors are connected to a single turbine, are controlled by the common control room and share the same refuelling equipment. The high level of passivity allows deployment on sites without interconnected grids and difficult accessibility. Considering the mentioned characteristics of the plant, the safety approach should exclude core melt and associated emergency zone from the definition of the “severe accident”.

1.2. Site Considerations during Operation

The characteristics of the sites and the mission of the reactor are determinant on the concept of the plant. The plant can be located in sites with availability of cooling water or without availability of cooling water. The high efficiency of the plant (about 42% net) reduces by about 30% the heat released to the condenser with respect to a typical LWR plant.

The design of the plant is based on the Ranking water-steam cycle with a condenser cooled in open circuit, if water from sea, river or lake is available, and, in case it is necessary to minimize water consumption, by a cooling tower. The water availability reduces the cost of the BOP and increases the plant efficiency. Dry cooling of the condenser remains a viable option for arid regions.

The plant is conceived without "emergency zone", that means that the "severe accident" will have a radiological impact at the site < 10 mSv in the long term (10 mSv been generally the limit for the confinement of the population in the event of a nuclear accident).

Being a fast reactor, the core of the LFR-AS-200 can be nearly self-sufficient in Pu (breeding ratio~0,9) or, with some modifications, can also be transformed in Pu burner (breeding ratio~ 0,5). With this peculiar function related to fuel cycle, it is expected that the site shares other facilities, like fuel reprocessing or fuel manufacturing.
The plant is provided with a pool for 5 years spent fuel capability + a full core. Locations for spent fuel in dry condition are also provided.

1.3. Grid Integration

The plant is conceived to operate in sites with interconnected grid, but, given its highly passive characteristics, can be adjusted to operate in sites without interconnected grids, and protected from severe natural phenomena as well as man-made aggressions and cyber threats. The fuel residence time is 80 months with partial reload after 16 months full power operation.

In a two-units configuration, the turbine-generator set will operate at 50 % power during the refuelling of one reactor.

The reactor can be operated in "priority reactor" for base load and in "priority grid" for compensation of power demand in the range 20 – 100% rated power. In a smaller rang, to be defined, the plant will be operated in "frequency control". In the event of network loss, the system can be operated in on "house load" configuration.

In order to reduce the thermal transients on the fuel and increase the load-following capacity without adjustment of the core power, a hot water storage is provided in order to reduce the amount of steam bled from the low pressure turbine and to allow a 6 hours operation at increased power (up to about 220 MWe) or reduce the power of the plant to around 180 MWe by increasing the amount of steam spilled from the turbine to preheat the stored water. This capability can be particularly useful for the "frequency control" mode.

2. *Technical NSSS/Power Conversion System Design*

SUMMARY FOR BOOKLET

The LFR-AS-200 is a pool type reactor, which means that all the primary components are installed in the Reactor Vessel. Among the key-components are: Core, six Spiral-Tube Steam Generators (STSG), six Recirculation Pumps, three + three Dip Coolers of the Decay Heat Removal Systems (DHR), and the Amphora-Shaped Inner Vessel (ASIV).

The core consists of 61 wrapped, hexagonal FAs, each containing 390 fuel pins laid out on triangular pitch.

Power shaping or flattening has been achieved through the use of zones with three different levels of Pu-enrichment. The FAs, the weight of which is supported by buoyancy, present stems extended up to above the free level, i.e. in gas space. Their heads can be interconnected, and the outer heads fixed also to the section of ASIV facing the cover gas, by means of cams, which are integral part of each head. The result is a self-sustaining core anchored to the inner profile of the ASIV, that acts as the core barrel in gas space.

The FA foot is free from mechanical supports (no core grid of classical design such as the Diagrid of SPX1) except for the radial touching with adjacent FAs, which are brought into contact to create a packed bundle, bounded on the lower end by the contoured edge of the bottom port of the ASIV. The stem of the FAs is peculiar to this novel design, because the FAs heads are directly accessible for handling with an ex-vessel refuelling machine operating in gas space under visual control in conjunction with rotating plugs of classical design. Core reactivity is controlled by ex-core rods, installed in the lead pool between the core and the ASIV. Ultimate reactor shutdown is ensured by core expanders placed on the FAs stems.

The Spiral-Tube Steam Generator (STSG) is an innovative SG conceived for compactness and because it offers several advantages in term of reactor cost, safety and reactor operability and simplicity of the lead flow path. The SG tube bundle, partially raised above the lead-free level of the cold collector, is composed of a stack of spiral-wound tubes.

The inlet and outlet ends of each tube are connected to the feed water header and steam header, respectively, both arranged above the reactor roof to eliminate, in case of their failure, the risk of large water/steam release inside the reactor vessel.

The SG is fed from the bottom. The SG, although actually a cross-flow SG, is thermally almost equivalent to a pure counter-current SG, because the feed water in the tube circulates from the outer spiral to the inner spiral, while the primary coolant flows radially in opposite direction from the inner shell to the outer shell. Because the flow path of the primary coolant inside the bundle is short, its speed can be increased while keeping limited the pressure loss.

The vertical axial-flow pump is integrated inside the SG; the pump rests on, and is connected to, the upper support plate of the SG by means of a flange which closes the pump's shaft penetration through the reactor roof and supports the variable-speed electric motor of the pump.

The pump is characterised by a short, large-diameter, tapered hollow shaft containing lead brought in rotation by the shaft itself, in order to increase the mechanical inertia of the pump. There are no in-lead pump bearings.

Fuel handling area is provided for handling fresh fuel assemblies which are transferred inside the reactor by a handling machine provided with heating system. Spent fuel assemblies are transferred to a spent fuel pool with a handling machine provided with cooling system.

Man-machine interface is provided by the control room. Class 1E DC power system feeds safety-related instrumentation, monitoring and lighting in case of loss of AC power.

2.1.Primary Circuit

The reactor vessel is shaped as a cylindrical vessel with oval bottom head and flat roof. The free surface of lead is kept sufficiently below the roof to allow for a gentle thermal gradient between the vessel in contact with lead and the colder roof.
The gas plenum above the free level is argon cover gas.
The roof is made of a circular thick plate with penetrations for components of the primary system and a large-diameter, central upstand, which supports the small and the large rotating plugs (FIG.2.).

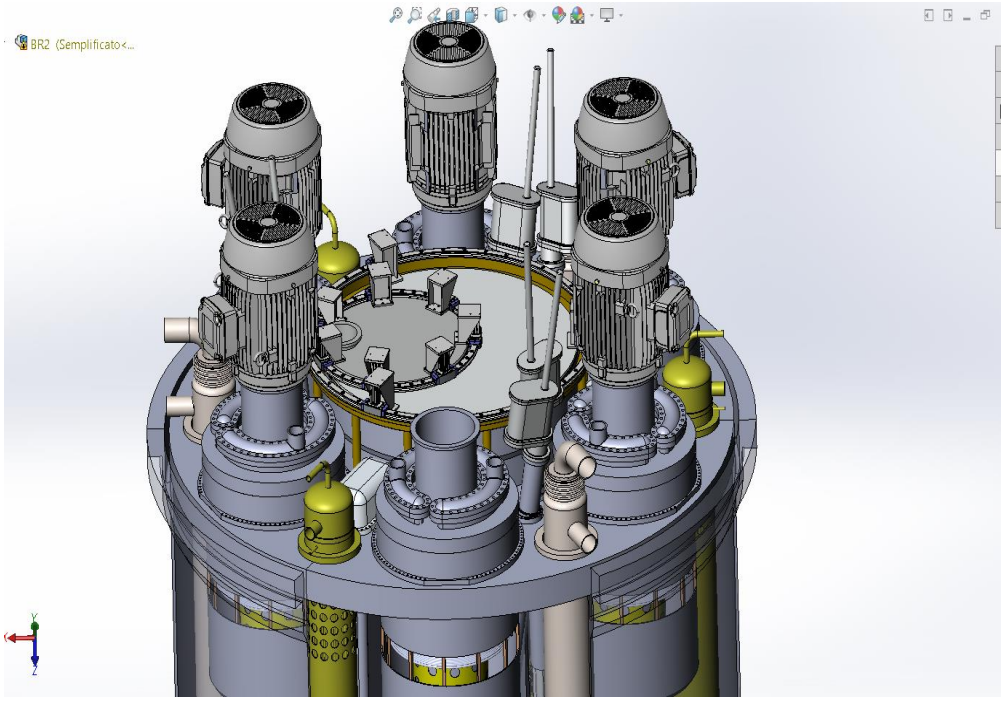

Fig.2. Reactor roof main components layout

The Amphora Shaped Inner Vessel (ASIV), supported by the roof of the reactor vessel, is a mechanical structure that in the upper part accommodates the heads of the Fuel Assemblies (FAs) and in the lower, larger part, their active section. The upper part of the ASIV, with his internal profile, matches the external profile of the heads of the FA to support them and the entire core. The result is that the FA are supported by the upper part of the ASIV, the roof and the reactor pit, all structures operating in gas space and hence far from the regions submitted to neutron damage and thermal transients. A large pool of lead interposed between the FA and the ASIV protects the ASIV from neutron irradiation and thus allows the elimination of the shielding elements normally required in a fast reactor. Only a local protective plate is provided adjacent to the inside of the ASIV to reduce its maximum local damage below 2 dpa.
The ASIV separates the hot collector from the cold collector and is provided with ducts branching out from its bottom part, each duct feeding hot lead to one SG.

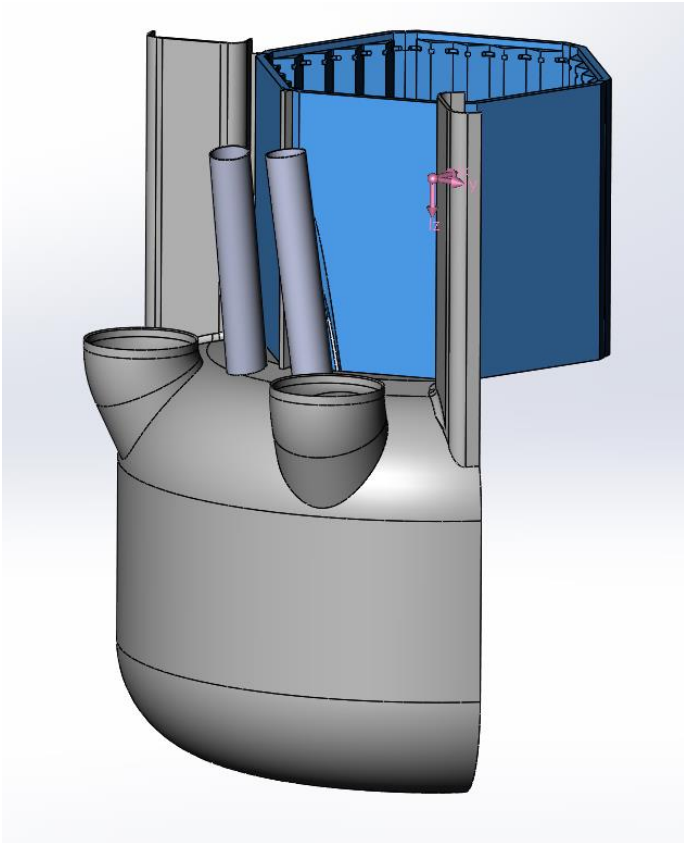

Fig. 3 The Amphora Shaped Inner Vessel

To be removable, the internals are hung from, and supported by, the reactor roof. The penetrations through the reactor roof are gas tight-sealed because reactor roof and reactor vessel constitute the primary containment. No in-vessel component is connected to the Reactor Vessel.

The Spiral-Tube Steam Generator (STSG) is an innovative SG conceived for compactness and because it offers several advantages in term of reactor cost, safety and reactor operability and simplicity of the lead flow path (Table 1). The SG tube bundle, partially raised above the lead-free level of the cold collector, is composed of a stack of spiral-wound tubes.

Table 1. LFR-AS-200 main SG parameters

Number of SG and Pumps	6	Outer diameter of tubes (mm)	18
Outer diameter of the SG outer shell (m)	1,3	Tube-bundle height (m)	1,82
Number of tubes	100	SG shell-side pressure loss (bar)	0,2
Active length of the tubes (m)	34		

The inlet and outlet ends of each tube are connected to the feed water header and steam header, respectively, both arranged above the reactor roof to eliminate, in case of their failure, the risk of large water/steam release inside the reactor vessel.

The tube spirals, one spiral for each tube, are arranged one above the other and equally spaced (fig.4).

The SG is fed from the bottom. Hot lead flows radially through the perforated inner shell and, once past the tube spirals, flows into the cold collector through a circumferential window located just below the lead's free-level.

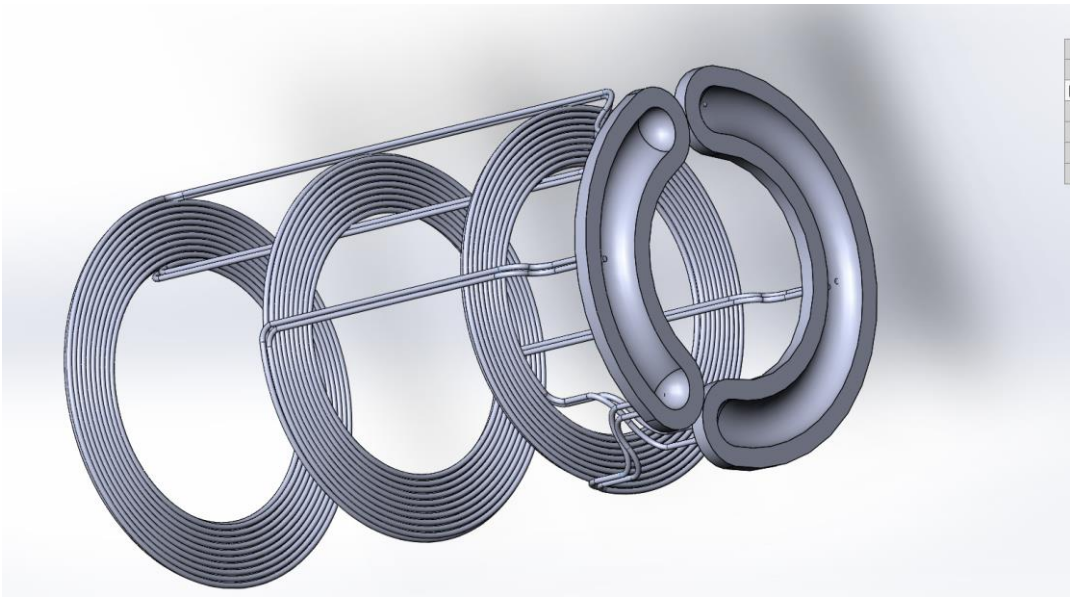

Fig . 4. Scheme of the tube bundle of the plane-spiral-tube steam generator

The SG, although actually a cross-flow SG, is thermally almost equivalent to a pure counter-flow SG, because the feed water in the tube circulates from the outer spiral to the inner spiral, while the primary coolant flows radially in opposite direction from the inner shell to the outer shell. Because the flow path of the primary coolant inside the bundle is short, its speed can be increased while keeping limited the pressure loss.

The vertical axial-flow pump is integrated inside the SG; the pump rests on, and is connected to, the upper support plate of the SG by means of a flange which closes the pump's shaft penetration through the reactor roof and supports the variable-speed electric motor of the pump (fig.5).

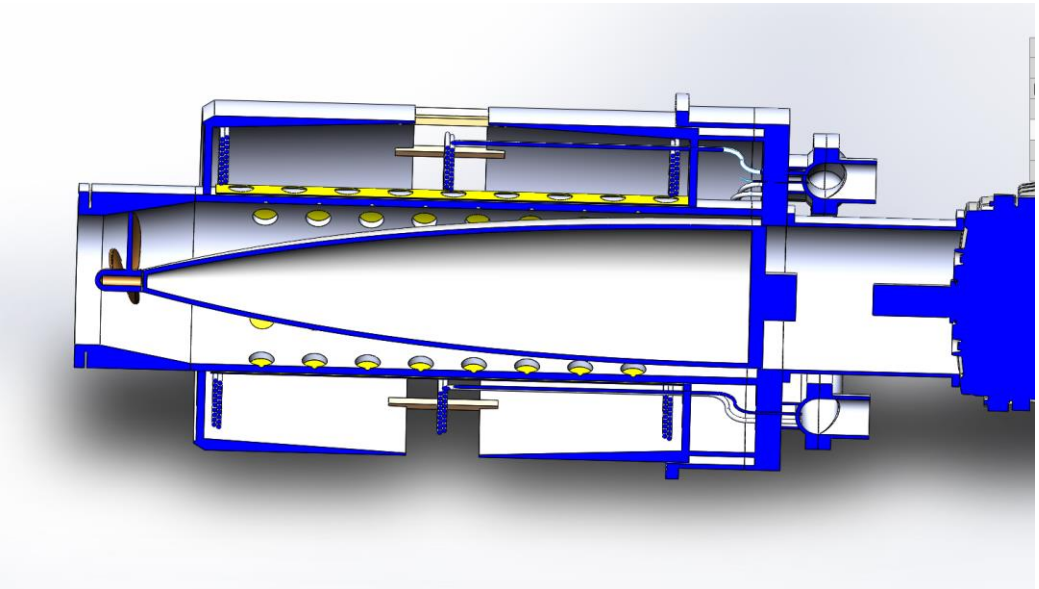

Fig.5. Scheme of the pump-steam generator assembly

The pump is characterized by a short, large-diameter, tapered hollow shaft containing lead

brought in rotation by the shaft itself, in order to increase the mechanical inertia of the pump. There are no in-lead pump bearings.

DHR is performed by means of two diverse, redundant systems, each consisting of three identical loops, each loop rated 2.5 MW. Two loops are sufficient to remove the decay heat.

The loops of the first system are filled with lead. Each loop consists of a lead-lead dip cooler and of a lead-air cooler with interconnecting piping, and is passively operated and also passively actuated thanks to the thermal expansion of the cold branch of the loop, which actuates the louvers of the air cooler when its temperature exceeds 400°C.

Each loop of the second system consists of a lead-boiling-water dip cooler (2,5 MW nominal power), of a vessel with 20 m^3 storage water, of interconnecting piping and of a (1 MW) steam condenser installed in order to reduce the storage water consumption and to operate the system for unlimited time without need of make-up water. It is passively operated and actively actuated.

Dissolved oxygen in the melt is kept below 10^{-7}wt.% with no provisions for oxygen addition to simplify the plant operation. All components of the primary systems will be protected by an alumina coating from lead corrosion and to ensure a clean primary coolant. The selected material for the reactor vessel is the stainless steel 316LN already qualified for the Sodium-cooled Fast Reactor (SFR). The preferred steels candidates for the internals are the alumina-forming austenitic (AFA) steels (pending qualification in lead alloys in the GEMMA project of the Horizon2020 Euratom Framework Programme).

2.2.Reactor Core and Fuel

The core (see Table 2) consists of 61 wrapped, hexagonal FAs, each containing fuel pins laid out on triangular pitch.

Table 2. LFR-AS-200 main core parameters

Number of FAs	61	Clad thickness (mm)	0,6
Number of pins/FA	390	Pellet outer diameter (mm)	9
Active height (cm)	85	Pellet's hole diameter (mm)	2
Pins pitch, triangular (mm)	13,6	Coolant velocity (m/s)	1,68
FA pitch (mm)	280	Mass of fuel (t)	12,8
Clad outer diameter (mm)	10,5	Core pressure loss (bar)	0,9

Power shaping or flattening has been achieved through the use of zones with different levels of Pu-content.
The FAs, the weight of which is supported by buoyancy, present stems extended up to above the free level, i.e. in gas space. Their heads can be interconnected, and the outer heads fixed also to the section of ASIV facing the cover gas, by means of cams, which are integral part of each head. The result is a self-sustaining core anchored to the inner profile of the ASIV, that acts as the core barrel in gas space.

The lower part of each FA consists of a bundle of fuel pins vented, through a common pipe fastened to the FA stem, toward a gas conditioning system located outside the Reactor Vessel.

The vented fuel pins is not a "sine qua non" requirement for the LFR-AS-200, but very useful because it opens the way to cores with very high burn up, for which it becomes essential. In fact, thanks to the ability to breed new fuel, the burn up limit of a fast reactor is not related to fuel consumption but to the mechanical resistance of the fuel cladding. It is foreseeable that

fuel claddings more resistant to creep and with less swelling can be developed for increasing the burn up to about 20% or more.

The FA foot is free from mechanical supports (no core grid of classical design such as the Diagrid of SPX1) except for the radial touching with adjacent FAs, which are brought into contact to create a packed bundle, bounded on the lower end by the contoured edge of the bottom port of the ASIV. The stem of the FAs is peculiar to this novel design, because the FAs heads are directly accessible for handling by an ex-vessel refueling machine operating in gas space and under visual control, in conjunction with rotating plugs of classical design.

The active region, 850 mm tall, is made by a stack of 68 fuel pellets, sintered starting from powders of mixed uranium-plutonium oxide (MOX). To flatten the power distribution throughout the core, however, three different MOX blends are used:

- all the fuel pellets in the outermost 24 FAs have 23.2 wt.% plutonium content;
- the fuel pellets belonging to the remaining 37 internal FAs are grouped in three axial sections:
    - the central one, 550 mm tall – 44 pellets – has fuel with 14.6 wt.% of plutonium,
    - the two, equal, external sections, 150 mm long – 12 pellets each – have a plutonium content of 20.4 wt.%.

All pellets have the same geometry, with an outer diameter of 9.0 mm, resulting in a radial gap of 0.15 mm, sufficient for the accommodation of the swelling expected at the aimed burn-up. For the same reason, and in order to reduce the maximum temperature in the hottest pellet of the peak pin, the pellets are provided with a central hole, 2.0 mm diameter.

2.3. Fuel Handling

The reactor roof presents two rotating plugs, a smaller one (small rotating plug) inside and offset from the center-line of the larger one (large rotating plug).

The rotation of the two plugs allows positioning of the handling flask above the fuel assembly to be handled for refuelling of fresh fuel.

The rotation of the plugs is carried out by gearmotors and by gear wheels, fixed to the respective plugs, and by a series of bearings of the HEPCO – BHJR.

The seal towards and from the reactor is obtained by pairs of joints, the space between the two joints is kept under slight pressure to ensure a dynamic barrier and at the same time the tightness control of the joints. Bearings and joints can be replaced if needed without losing the sealing function of the rotating plugs.

The plant is provided with two handling flasks. A first flask transfers the fresh fuel to the reactor and is equipped with heating systems to preheat the FA before introduction in the melt to prevent them be submitted to thermal shocks when in contact with the hot lead of the primary system. The second flask transfers the spent fuel from the reactor to the spent fuel pool and is equipped with cooling systems to allow FA cooling during transfer.

Cooling is performed in argon forced circulation. Argon natural circulation will back up forced circulation in case of loss of power. Sealing during the coupling between the small rotating plug and the handling flask is ensured by VAT-valves.

2.4. Reactor Protection

To control the system, hence for compensating the reactivity swing from cold shutdown to full-power, the criticality swing during burnup, and for control of power excursions, 6 ex-core control rods (CRs) are envisaged (Fig. 6). Owing to their (variable) position, in the lead pool between the core and the ASIV, the CRs absorb more or less leaked neutrons to control the chain reaction. To accomplish this, a reversed-flag shape has been chosen.
The reversed-flag CRs are composed of a rotating pole connected on the bottom end to an oblong box (the flag), made of austenitic stainless-steel class "15-15Ti", in which the absorber pin bundle is located. The pin bundle is composed of two specular triangular arrangements for a total of 82 pins, kept together by two main grids located at both ends. The pins contain a stacked absorber pellets (made of B4C with high ^{10}B enrichment.

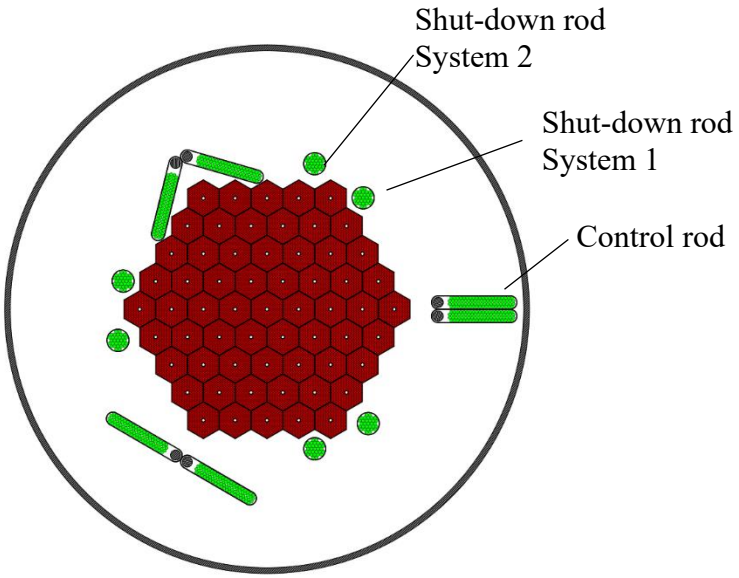

Fig.6. Scheme of control and shut down rods position with respect to core

The CRs are operated by rotation of the pole so as to approach or move away from the core.
The first ex-core system envisaged to promptly shutdown the reactor in case of emergency, is formed by an absorber pin bundle kept together by two main grids located at both its ends; the top grid is connected to the holding pole, with the main function to keep the bundle in withdrawn position and to insert it in case of SCRAM signal. The system indeed, operate in a more traditional way, being driven from gravity by means of a ballast. The absorber portion is also made of highly enriched B_4C.
The second redundant safety system, has an absorber pin bundle similar to the previous one but normally located at lower level with respect to core.
Thanks to the bottom insertion, it can be operated by a float which, entrains the neutron absorber closer to the active part of the core, when the level of the coolant increases, owing to slowing down of the circulation pumps.

Ultimate reactor shutdown is ensured by core expanders placed on the FAs stems, which amplify by factor 4 the thermal expansion of the core (in comparison with the expansion resulting from that of the upper grid of the FAs) when the coolant outlet temperature exceeds the design temperature.

2.5.Secondary Side

The secondary system is based on the Rankine cycle with superheated steam. The only peculiarity is related to the use of lead as the coolant in the primary system. To avoid lead freezing inside the SG, a prudential high SG inlet temperature is set to 340ºC; this temperature is higher than the melting point of Pb, at 327ºC. The condenser pressure is assumed at 6kPa.
The turbine is made of one high pressure stage and two low pressure stages, with a deaerator fed by steam from the outlet of the high-pressure stage. The turbo-generator set operates at 3000 rpm. A hot water storage is provided in order to reduce the amount of steam bled from the low-pressure turbine and allow a temporary operation at 110% Pn.

2.6. Containment/Confinement

In case of the LFR-AS-200 it is possible to control the build-up of the inner pressure of the fuel pins, and hence preventing over-strain on the cladding, by venting the fission gas into a system located outside the reactor vessel, owing to the fact that the stems of the Fuel Assemblies are extended into the cover gas plenum (Extended-stem FA).
The fission gas venting system can be regarded as subdivided into two sections. The first section is integral part of each fuel assembly up to the quick-connection to the main header supported by the ASIV (more precisely to the tube portion connected to the main header). The second section regards the remaining venting system located in the Reactor Building. Thus, the first section starts from the small-bore tubing at the head of each pin. All tubes convey fission gas to the Fuel Assembly collector embodied in the upper grid of the pins.
The collected fission gas is then conveyed, past the Expander, to the Head of the Fuel Assembly by means of a tube laid out along and supported by the stem. This first section of the venting system, will be disconnected and isolated from the venting system to allow lifting off of the relevant Fuel Assembly.
The vented fuel pins have several huge advantages, namely:
a) Reduced length of the core.
b) Reduction of the primary pressure loss.
c) Minimization of the buoyancy.
d) Minimization of the end-of-life inner pressure of the fuel pins.
e) Drastic reduction of the seismic loads.
f) Reduction of radioactive gases release in accidental conditions.

The use of vented fuel pins leads to an extension of the first barrier (the fuel cladding) beyond the reactor vessel. The system for the collection and treatment of fission gases (Xe, Kr...) and volatile elements (Cs, I…) can profit of different processes used in the past (among them cold traps, oxidation, plating out, etc). The reference is based on filtering the gas extracted from the fuel so that as quickly as possible the radionuclides are stored in a solid matrix.
The design of confinement remains based on the classic principle of the three consecutive, independent barriers (fuel cladding + extension, the primary circuit, and secondary confinement) so that breaking of one barrier does not compromise the next barrier. For this, the fission gas purge tubing is doubly contained.
Vented fuel (even if of a different design) has already been used in the past (at Peach Bottom Unit 1 and Dounreay Fast Reactor) and in the safety analysis, the confinement approach was also based on "fixation of gaseous and volatile products by filtration".
The “secondary confinement” is provided with a concrete containment, external-missile-proof. The dimension of the containment is kept small because of the low potential energy stored in the coolant (which operates at atmospheric pressure) and of the small inventory of water/steam of the secondary circuit. Moreover, a safety vessel eliminates any loss of coolant accident

(LOCA), in the event of a failure of the reactor vessel. The “practical elimination” of “core melting” will reduce the design requirements on containment, in particular in term of cooling systems. In the LFR-AS-200 the confinement has not a dedicated cooling system. An extensive core damage being excluded by the passive characteristic of the plant, the “severe accident”, considered in “extended design conditions” to specify the characteristics of the confinement, is the fall of a spent FA during refueling. Moreover, it is expected that, in the analysis of the consequences of the “severe accident”, the plant should exclude the need of an “emergency zone” so that the radiological limits of the incidental conditions will be respected (no shelter or evacuation of the population from the emergency zone).

2.7. Electrical, I&C and Human Interface

Fundamental safety functions are basically passive, however, there will be the need of UPS (Un-interruptible Power Supply) for measurements, I&C, emergency lighting, fuel handling actuators and fans and some other very low-power actuators like solenoid valves.
The electrical distribution is divided into safety- and non-safety distribution, for granting safety and non-safety functions, respectively. The “safety-related distribution” consists of two trains physically separated (e.g. train A and train B), for avoiding common-mode failure of the power supplies of safety-related equipment (e.g. in case of fire).
Each redundant safety system (shut-down, decay heat removal, isolation of the confinement) is fed either by train A or B. In case of loss of a train, the second train, is sufficient to ensure the power supply to the relevant safety system.
In each train, the equipment performing the safety function, will be powered by “safety electrical sources”, fed by batteries as a buffer against loss of the electrical network. The battery station will have 72 hours duty capacity.
Safety grade diesel-generators are not necessary and hence not provided.
In case of multiple units, control rooms will be shared at least between two units.

3. *Technology Maturity/Readiness*

SUMMARY FOR BOOKLET

No LFR has been yet built, but SFRs experience can be almost entirely used for the development of the LFR, which uses the same fuel, behaves functionally similar, presents similar thermal-hydraulic and mechanical aspects. Several key issues of LFR have been solved by Hydromine with innovative reactor configuration with new components, some of them tested at small scale, but for which a full-scale qualification is necessary. Key issues as seismic loads and the steam generator tube rupture accident have been solved by the use of a short innovative spiral-tube steam generator which allows respectively to design a robust short reactor vessel and to reduce lead displacement.
Issues of fuel handling in lead have been solved by adoption of fuel assemblies with extended stem in order to eliminate the need of an in-vessel refuelling machine. The issue of ISI in lead has been alleviated by supporting the fuel assemblies by their heads in gas space.
The main technological issue is related to corrosion of structural steels immersed in lead. The reactor vessel is kept at a temperature sufficiently low to allow the use of 316LN, the same steel of the SFR. For reactor internals and fuel cladding, however, new steels and/or protective coating are necessary. Alumina-Forming Austenitic steels appear resistant to corrosion in the operating temperature range of LFR-AS-200 and alumina coating developed by the Istituto Italiano di Tecnologia appears resistant to lead corrosion and to heavy ions irradiation, pending confirmation under neutron irradiation.

3.1. Technology maturity

Although LFR-AS-200 benefits from the experience of design, construction and operation of SFRs and previous designs of heavy metal cooled fast reactors, it represents a significant step forward and is quite distinct from any such previous designs.

No LFR has been yet built and the LFR-AS-200 is not yet in the licence process. To be noted nevertheless that SFRs experience can be almost entirely used for the development of the LFR, which uses the same fuel, behaves functionally similar, presents similar thermal-hydraulic and mechanical aspects. In particular most of the calculations code established for SFR, “mutatis mutandis”, can be used also for the LFR.

Lead properties present several key advantages for the design of a safe reactors, but present also same issues, mainly related to the mass of lead, its opacity and its corrosive behaviour. To solve the seismic issue Hydromine has developed a primary system configuration with a short vessel. Innovations have been conceived by Hydromine to alleviate the issue related to the steam generator tube rupture accidents and to simplify refuelling. The result is that most of the design issues have been solved by innovations which, in addition, enhance the safety and economics of the LFR; the drawback being the need of new components testing, most of them to be tested at full scale.

The last issue related to corrosion behaviour cannot be solved by means of new reactor configurations, but only through the development of new materials or protective coatings. Because corrosion is temperature-dependent, no significant corrosion of the reactor vessel occurs with the use of stainless steels already qualified for nuclear applications. The internals of the reactor and the fuel cladding need, however new steels or protective coatings. In the frame of the EU GEMMA project, promising AFA steel are under development for the reactor internals and PLD coating for the fuel rods. Plenty of test facilities are available worldwide for material qualification in lead. Qualification of new steels or coating under neutron irradiation

is, instead, a key issue because of the absence of adequate irradiation facilities in fast flux at least in the western countries.

For this reason, Hydromine has very recently decided to explore the possibility of construction and to give the priority to a very small LFR (the LFR-TL-X) that operates at lower temperature and, hence, can use available steels which are resistant to lead corrosion and have been already qualified in fast neutron spectrum. Channels operating at higher temperature will allow qualification of steels for the LFR-AS-200. The deployment of the LFR-AS-200 therefore depends on the succesful previous operation of the LFR-TL-X and start of construction presumably not before the end of the 20s.

4. *Safety Concept*

SUMMARY FOR BOOKLET

Lead has excellent cooling properties and its nuclear properties (i.e., its low tendency to absorb neutrons or to slow them down) enable it to readily sustain the high neutron energies needed in a fast reactor, while offering the reactor designer great flexibility. Lead has a very high boiling point, namely 1737 °C. As a result, the problem of boiling coolant is for all practical purposes eliminated. As a coolant operating at atmospheric pressure, the loss of coolant accident (LOCA) can be virtually eliminated by use of an appropriately designed guard vessel. The LFR-AS-200 exploits lead properties, which include a margin of hundreds K between the operating temperature and the mechanical limits of the core and the primary system, for actuation of passive shutdown and passive decay heat removal systems, which do not need power sources, operator intervention and logics, and hence are also free from cyber-attacks. Compatibility of lead with air and water allows diversification of the heat sinks: stored water and atmospheric air.
DHR is performed by means of two diverse, redundant systems, each consisting of three identical loops, each loop rated 2.5 MW. Two loops are sufficient to remove the decay heat.
The loops of the first system are filled with lead. Each loop consists of a lead-lead dip cooler and of a lead-air cooler with interconnecting piping, and is passively operated and also passively actuated thanks to the thermal expansion of the cold branch of the loop, which actuates the louvers of the air cooler when its temperature exceeds 400°C.
Core reactivity is controlled by ex-core rods, installed in the lead pool between the core and the ASIV. Ultimate reactor shutdown is ensured by core expanders placed on the FAs stems. In case of an ULOOP accident, the most severe conditions, which the LFR-AS-200 has to face, the strong negative feedback due to radial core expansion – magnified by the expansors placed atop the active region – quickly reduces the core power to a level that is comparable with the power of the DHR system.

4.1. Safety Philosophy and Implementation

The research and development program of the LFR-AS-200 is guided by a GIF IV Technology Roadmap document which identified three specific safety goals for Generation IV systems "*to be used to stimulate the search for innovative nuclear energy systems and to motivate and guide the R&D on Generation IV systems"*:

1. Generation IV nuclear energy systems operations will excel in safety and reliability.

2. Generation IV nuclear energy systems will have a very low likelihood and degree of reactor core damage.

3. *Generation IV nuclear energy systems will eliminate the need for offsite emergency response.*

Lead has a very high boiling point, namely 1737 °C. As a result, the problem of coolant boiling is for all practical purposes eliminated. The high margin to boiling leads to important safety advantages that should also result in design simplifications and improved economic performance.

As a coolant operating at atmospheric pressure, the loss of coolant accident (LOCA) can be virtually eliminated by use of an appropriately designed guard vessel. This is not only a safety advantage, but also offers additional potential for plant simplification and improved economic performance since the complex process of simultaneous management of temperature, pressure and coolant level (as seen in water-cooled reactors) is not necessary.

One of the most important characteristics of lead as a coolant is its chemical inertness. In comparison with other coolants, especially sodium and water, lead is benign coolant material, i.e. there are no chemical interactions which can lead to significant energy release in the event of accident conditions. Further, the tendency of lead to retain fission products and other materials that might be released from the fuel in the event of an accident is another important advantage. The elimination of the need for an intermediate cooling system to isolate the primary coolant from the water and steam of the energy conversion system represents a significant advantage and potential for plant simplification and improved economic performance.

Following the Fukushima-Daiichi reactor accident, it is important to consider future reactor technologies in light of the severe, extended-design, conditions which may take place, even if their probabilities are assumed to be very low. The LFR can demonstrate superior features to avoid the consequences of such a severe set of accident scenarios. The primary problem in the Fukushima scenario was the common-mode failure of diesel generators (caused by the tsunami) during an extended blackout condition (caused by the earthquake). An LFR would not need to rely on such backup power and would be resilient against the loss of service power by virtue of passively operated decay heat removal enabled by the natural circulation capabilities of the lead coolant and its inertness in contact with air or water.

Second, the loss of primary coolant at the Fukushima-Daiichi reactors resulted from pressurized water coolant. An LFR with guard vessel would not suffer a loss of primary coolant, even in the event of a failure of the reactor vessel.

Third, the steam-cladding interaction at the Fukushima-Daiichi reactors resulted in vented hydrogen and associated explosions. With the chemical inertness of lead as a coolant, such hydrogen generation does not occur, in addition lead has a high retention capability of volatile fission fragments.

The Risk and Safety Working Group (RSWG) of GIF recognizes that “defence in depth is the key to achieve safety robustness, thereby helping to ensure that Generation IV systems do not exhibit any particularly dominant risk vulnerability. To meet these objectives the defence in depth has to be implemented in a way which is exhaustive, progressive, tolerant, forgiving and well-balanced”.

A typical example of the application of the defence in depth of the LFR-AS-200 is related to the consideration of the steam generator tube rupture. This is an accident to be carefully dealt with in consideration that LFR has the steam generators inside the reactor vessel. To minimize the effect of the accident, the LFR-AS-200 offers many provisions:

- location of the water and steam collector above the reactor roof, i.e. outside the vessel to
- avoid catastrophic pressurization of the reactor vessel.
- short steam generator, with bottom inlet and top outlet to avoid steam entrainment into the core and to reduce lead displacement.
- installation of a check valve in each tube at the entrance into (and located inside) the steam header and of a self-actuated isolating, excess-flow valve inside the feed water header. With these valves any leaking tube is promptly isolated.
- perforated companion shell placed close to inner shell of the SG, held apart a few mm by spacers. The spacers are designed to collapse in case inner pressure surge to allow companion shell move against inner shell and thus prevent reversal of the coolant flow.
- a cover gas depressurization system
- a sensitive and reliable leak detection system
- a reliable steam generator depressurization and isolation system; depressurization will be provided both water side and steam side. It is not certain, however, that the leak detection

systems can discriminate the failed SG. Thus, the simultaneous depressurization of the six integrated SGs could become necessary. For this reason, the SG are not accredited as a safety system for DHR.

4.2. Transient/Accident Behaviour

The LFR-AS-200 exploits lead properties, which include a margin of hundreds K between the operating temperature and the mechanical limits of the core and the primary system, for actuation of passive shutdown and passive decay heat removal systems, which do not need power sources, operator intervention and logics, and hence are also free from cyber-attacks. A temporary rise in temperature to allow the intervention of passive systems is also admissible with regard to the corrosion of steels in lead because corrosion is a slow process.

Compatibility of lead with air and water allows diversification of the heat sinks: stored water and atmospheric air.

DHR is performed by means of two diverse, redundant systems, each consisting of three identical loops, each loop rated 2.5 MW. Two loops are sufficient to remove the decay heat.

The loops of the first system are filled with lead. Each loop consists of a lead-lead dip cooler and of a lead-air cooler with interconnecting piping, and is passively operated and also passively actuated thanks to the thermal expansion of the cold branch of the loop, which actuates the louvers of the air cooler when its temperature exceeds 400°C. This is possible because a small flow- rate natural circulation is present, during normal operation, owing to the thermal loss of the circuit which is colder (400°C) than the cold collector (420°C).

The high degree of safety of LFR-AS-200 is confirmed by the simulation of the plant behaviour during a complete station blackout as happened at the Fukushima-Daiichi nuclear power plant. After reactor shut-down neither operator action is credited, nor automatic actuations.

The temperature evolution of lead fuel clad and vessel is presented in Figure 7.

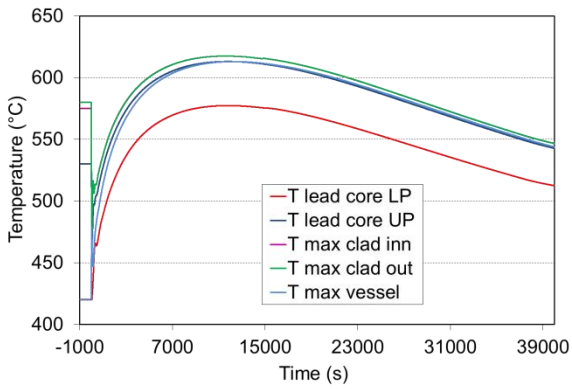

Fig. 7. Temperature evolution of lead, fuel cladding and vessel following a total station blackout

Core reactivity is controlled by ex-core rods, installed in the lead pool between the core and the ASIV. The main conditions against which the LFR-AS-200 is challenged are those determined by an ULOOP accident. Such conditions may result from the complete loss of power to the plant and the contextual failure of the RPS to actuate SCRAM: in practice, the simulated accident is alike the one occurred at the Fukushima-Daiichi nuclear power plant, but further complicated by the unsuccessful shutdown of the core. Under these conditions, all the Primary Pumps (PPs) are arrested and the Steam Generators (SGs) unavailable while the core continues to produce its nominal, full-rated power. For conservativeness, only one of the two Decay Heat

Removal (DHR) systems is assumed to work, but with only two out of the three loops in operation (single failure assumption).

During the first phases of the accident, the response of the system is driven by the initial undershot in the coolant flow rate, partially smoothed by the inertia of the PPs (top-left frame of FIG. 8). The sudden reduction of the coolant flow rate and the lack of the main heat sink result in a steady increase of all system temperatures (top-right frame of FIG. 8). The increase of system temperatures triggers and progressively enhances the feedback responses of the core (bottom-left frame of FIG. 8) which in turn determine the reduction of the system power (bottom-right frame of FIG. 8.

The inherent shutdown of the core is so fast to induce some fluctuations after the first equalization of the core and DHR powers; however, in less than 8 hours after the beginning of the accident, the transient is concluded and the system stabilized to a new equilibrium condition.

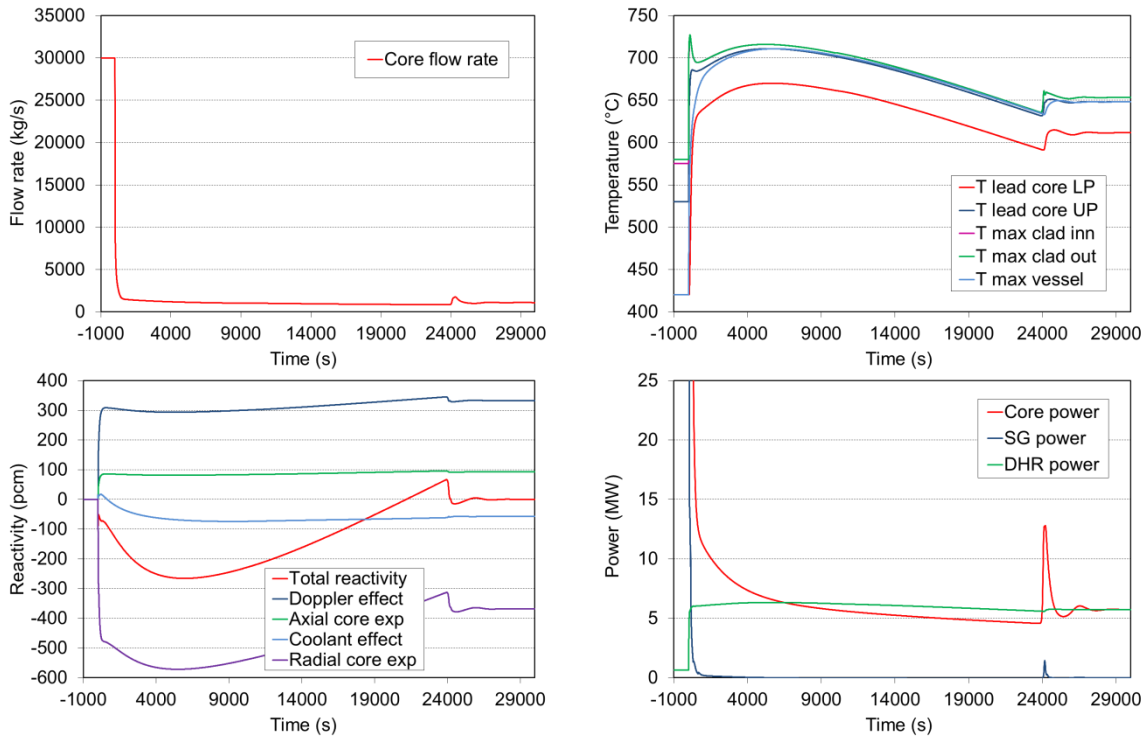

FIG. 8. Power distribution per FA at Beginning and End of Cycle as a function of the radial distance from core center (left) and axial power distribution factor at Beginning of Life, Beginning and End of Cycle for a fuel pin in the central FA (right).

Apart from the initial temperature peak – notably for the cladding, at about 730 °C – due to the flow undershot following the arrest of the PPs, all system temperatures stabilize at about 650 °C. In these conditions, and considering the loads to which the structures are subject, no failure is to be expected in the short- (due to the initial peak) nor in the long-term (at the final stationary regime), thereby proving the complete protection of the investment even in these conditions. Notably, it is worth stressing that nor for the fuel claddings nor for the main vessel – which are the first two barriers against the release of radioactivity inventory – are expected to fail in such challenging conditions.

It is worth highlighting the magnification effect that the expansors placed atop the core on the stem holding each FA have on the radial core expansion coefficient: when the core outlet temperature exceeds the critical value Tc = 560 °C at which the expansors enter in contact, their expansion – owing to a large coefficient of thermal expansion (Table 3) – forces the FAs

to space apart from each other much faster than normally occurring owing to the expansion of the wrappers, enhancing the loss of criticality by increase of the neutron leakage and by the ingress of more lead in the by-passes between adjacent FAs. Under such conditions, this coefficient becomes by far the largest, thereby assuming the leading role in every transient, quickly reducing the core power to levels that are comparable with those of the DHR system in operation.

Table 3: Reactivity coefficients for the LFR-AS-200.

Coefficient	Value [pcm/K]
Doppler effect	-0.737
Axial core expansion (not linked/linked)	-0.205 / -0.268
Radial diagrid expansion (below/above T_c)	-0.308 / -0.378
Radial pads expansion (below/above T_c)	-0.648 / -2.309
Coolant expansion in active region	0.366
Coolant expansion (below/above/aside core)	-0.107 / -0.109 / -0.404

As safety requirements and computer codes progress, accidents of internal origin will be progressively eliminated by design till to practically zeroing their probability of occurrence. Events of external origin, instead, are more difficult to foresee.

The adoption of a fuel pins venting system reduces the inventory of volatile fission fragment, in addition lead has also good retention capability in case are released inside the primary system following a hypothetical fuel damage. The Fukushima accident has shown that, when every other cooling system is lost, the only solution to cool the core and recover a certain plant control, is to use water, whatever available source. In extreme conditions even the LFR-AS-200 can be directly cooled by water, as done at Fukushima, with the further advantage that frozen lead builds up its own sarcophagus (barrier made of frozen lead) and ultimately stops radionuclide dispersion.

5. *Fuel and Fuel Cycle*

SUMMARY FOR BOOKLET

The core consists of 61 wrapped, hexagonal FAs, each containing fuel pins laid out on triangular pitch. The active region, 850 mm tall, is made by a stack of mixed uranium-plutonium oxide (MOX) fuel pellets with three different MOX blends:

- all the fuel pellets in the outermost 24 FAs have 23.2 wt.% plutonium content;
- the fuel pellets of the remaining 37 internal FAs are grouped in three axial sections:
  - the central one, has contains 14.6 wt.% of plutonium,
  - the two, equal, external sections, have a plutonium content of 20.4 wt.%.

The aimed burnup is achieved with 2400 Equivalent Full-Power Days fuel residence time in the core, corresponding to about 80 months. In order to reduce the reactivity swing during burnup, the management of the fuel is based on a 5-batches strategy that is: every 16 months one fifth of the fuel is discharged and replaced with fresh fuel.

5.1. Fuel Cycle Options

The fuel inventory in the core is 12.8 t, of which 2.15 t and 9.15 t are plutonium and uranium, respectively. The aimed burnup is achieved with 2400 EFPDs (Equivalent Full-Power Days) fuel residence time in the core, corresponding to about 80 months of full-power irradiation.

In order to reduce the reactivity swing during burnup, and in consideration of the outages that are to be foreseen for periodic inspections and normal maintenance, the management of the fuel is based on a 5-batches strategy that is: every 16 months one fifth of the fuel (which has reached the limit of in-pile residence) is discharged and replaced with fresh fuel. The resulting criticality swing during an irradiation sub-cycle is 1340 pcm, which can be effectively compensated by the control rods.

The adopted plutonium contents cope with the aims of flattening the power distribution not only axially within the fuel pins of the FAs belonging to the inner core region (right frame of FIG. 9), but also among all the FAs at the level of the whole core (left frame of FIG. 9).

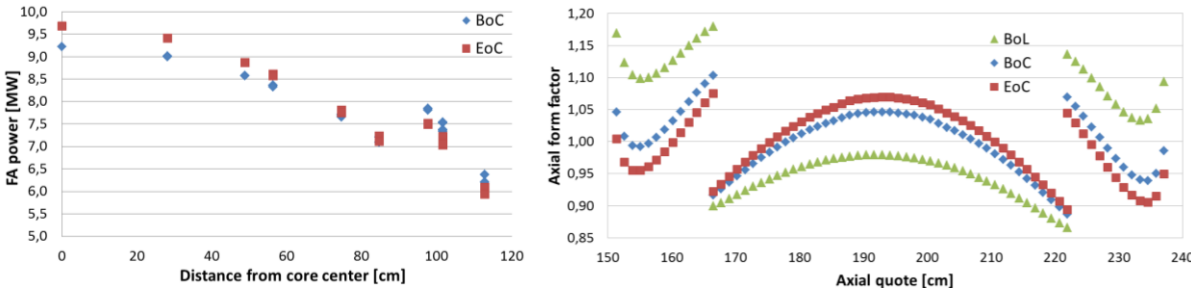

FIG. 9. Power distribution per FA at Beginning and End of Cycle as a function of the radial distance from core center (left) and axial power distribution factor at Beginning of Life, Beginning and End of Cycle for a fuel pin in the central FA (right).

To this end it is worth recalling that – due to the technological constraint of lead corrosion limiting the peak cladding temperature, flattening has to be pursued at the level of hot spot, thereby including in the computation also the internal power distribution among the pins of the hottest FA and the axial power distribution along the fuel in the hottest pin. Referring to distribution factors (i.e. local-to-average ratios) as shown in Table 4, it can be seen that the

proposed scheme fulfills the flattening target between the two fuel regions throughout the whole length of an irradiation sub-cycle.

Table 4: Power distribution factors for inner and outer core at beginning and end of cycle: among the FAs at core level (ff_{core}), among the pins at the level of the hottest FA (ff_{FA}), along the axial fuel length in the hottest pin (ff_{ax}), and their combination ($ff_{tot} = ff_{core} \cdot ff_{FA} \cdot ff_{ax}$).

Case	MAX ff_{core}		MAX ff_{FA}		MAX ff_{ax}		MAX ff_{tot}	
	INN	**OUT**	**INN**	**OUT**	**INN**	**OUT**	**INN**	**OUT**
BoC	1.1870	1.0100	1.0033	1.1902	1.1029	1.1328	**1.3135**	**1.3617**
EoC	1.2462	0.9676	1.0040	1.2087	1.0746	1.1289	**1.3445**	**1.3203**

5.2.Resource Use Optimization

The reference design has a core nearly self-sufficient in plutonium. A conversion ratio of about 0.9 is obtained without blankets (Table 5.). In the absence of fertile FA, a larger core would be necessary for complete autonomy in Pu, which is not a main objective of the project, given the surfeit of Pu available worldwide.

Table 5. Uranium and plutonium balance in the fuel during the irradiation period for the LFR-AS-200 version nearly self-sustaining in Pu.

Initial inventory	9139 kg_U	2148 kg_{Pu}
Final inventory:	8063 kg_U	2028 kg_{Pu}
Balance	-1076 kg_U	-120 kg_{Pu}

In countries which have long been producing nuclear energy, the goal is sometimes to reduce the inventory of available plutonium. Such a capability could be, indeed, an added value of the LFR-AS-200.

Having this in mind, an additional core design activity has been performed in order to define a new core configuration that maximizes plutonium burning (LFR-AS-200 Burner), while maintaining all the main plant characteristics. The new configuration features an increased number (127) of smaller FAs with fuel pins reduced in diameter from 10.5 mm to 7 mm. The fuel residence time is therefore also reduced to 1080 EFPDs.

Uranium and plutonium balance in the fuel during irradiation as presented in Table 6. The higher Pu content and the higher reactivity swing to be compensated make the control from the outside the core problematic. To avoid adjusting the core layout by removing some FAs from the core in order to gain space for installing control and shut down rods, with the consequence of an increased core radius, the space available inside the extended-stem of selected FAs can be used. This space results from the suppression of central fuel pins of FAs in order to locate a tube used to blow argon gas for cooling the spent FA being handled out-of-lead. During reactor operation, an absorber can be introduced into these FAs through the said tube.

Table 6. Uranium and plutonium depletion during irradiation in the LFR-AS-200 burner.

Initial inventory	3900 kg_U	1651 kg_{Pu}
Final inventory:	3606 kg_U	1412 kg_{Pu}
Balance	-294 kg_U	-239 kg_{Pu}

6. *Safeguards and Physical Security*

SUMMARY FOR BOOKLET

The use of a coolant chemically compatible with air and water and operating at ambient pressure greatly enhances Physical Protection.
There is reduced need for robust protection against the risk of catastrophic events, initiated by acts of sabotage and there is a little risk of fire propagation. There are no credible scenarios of significant containment pressurization.
For LFR-AS-200 the system elements where targets for potential diversion are located are: the fresh fuel storage area, the reactor core and the spent fuel area at fuel building.
The surveillance is facilitated by the possibility of visual inspection of the FA inside the three system elements (storage areas and reactor) which even include monitoring of the FA inside the core during operation. Monitoring of neighbouring areas is standard safeguard practice.

6.1. Safeguards

It is assumed that the first LFRs will be fuelled with Pu-based fuels, and subsequently, with added MA, according to the policy of the owner state, which can be loaded in homogeneous or heterogeneous fuel configuration.

Nuclear material is only present in fuel related items and potential targets for diversion are the entire fuel assemblies. No dismantling activities of the active part of the fuel assemblies are foreseen on the site.

In the reactor, the upper part of the fuel assemblies extends above the lead free level and can be continuously monitored by cameras, a relevant feature for implementation of safeguards

The system elements where targets for potential diversion are located are:

- The fresh fuel storage area;
- The reactor core;
- The spent fuel area.

The following considerations holding true for the LFRs are based on the hypothesis of an off-site central reprocessing and fuel fabrication facility. Spent fuel reprocessing can encompass separation of Pu and MA or of fission fragments only further to progress and developments.

Owing to the characteristics of the core, the Pu inventory is nearly constant during the reactor operation. Apart from the first core, the objective of core design can be to burn its own-generated MA, depending on fuel cycle policy in the country hosting the plant.

Concealed diversion of material from the reactor site can be deterred and detected by the application of international safeguards. Design features facilitating the application of Containment and Surveillance measures are: high level of automation; remote handling of both fresh and spent fuel; standardization of items in transfer in the facility (entire fuel assembly). The surveillance is facilitated by the possibility of visual inspection of the FA inside the three system elements, that even includes monitoring of the FA inside the core during operation. Monitoring of neighbouring areas is standard safeguards practice

For items in transit, only one route is foreseen and the flow of the material in the facility can be easily surveilled.

Signals from in-core instrumentation could be made available to inspectors to detect anomalies resulting from design modifications. Moreover in-core instrumentation will remain mostly operational even during refuelling.

Reactor construction/operation does not produce the technological know-how applicable to other sensitive fuel cycle phases.

The fuel assemblies are of large size and can be handled only by dedicated plant equipment, and require a high level of operator skill and training. All operations are performed remotely because of the high radiation level around the fuel elements handled in gas environment. Moreover, no equipment is available on site for disassembling the active part of the fuel assemblies. As far as MA-bearing fuel, the radioactivity level is so high as to require remote handling using methods and locations that create a substantial barrier for access of non-state actors.

Fresh fuel with Pu only would be a theft target similar to MOX assemblies of LWRs.

6.2. Security

The lead properties and the design feature of the LFR-AS-200 constitute a balanced set of protection both from external threats and insider actions.

It is not possible to act on the control and protection logics of the system to create irreparable events because the safety functions of reactor shut down and decay heat removal are also ensured by passive systems, which do not depend on logics and cannot be manipulated by the operator without making mechanical changes on site.

The redundancy, diversification and different location of the systems for removing decay heat makes it difficult for a targeted attack to suppress this function.

The containment function is facilitated by the fact that the reactor primary system operates at atmospheric pressure, that the lead boils at a very high temperature, and has great retention capacity even of the volatile fission fragments. The reactor building is compact and protects the reactor from air crash impact. The chemical stability of lead prevents fires and a simple intervention with water would allow the cooling of the bulk lead, with the formation of a solidified outer protective layer against radionuclide dispersion.

7. *Project Delivery and Economics*

SUMMARY FOR BOOKLET

Although Hydromine has carried out economic evaluations of the LFR-AS-200 project with favourable results, does not intend to publicly provide economic data before receiving feedback from the licensing process, but only to provide some general considerations to resolve the dilemma between the cost-effectiveness of large plants and the SMRs to which the LFR-AS-200 belongs.

Some design comparisons can be made with the large PWRs, which are the most common systems in operation today. For PWRs, the increase in power has always been considered advantageous for reducing the amount of structural material and the number of operators per unit energy produced, but the exceptionally long time needed for the construction of the large PWRs has recently questioned the cost-effectiveness of large plants.

The opposite process of power reduction generally leads to an increase of the specific quantity of material (for certain projects even by factor 3) and therefore to an impact in costs that is difficult to offset by the other numerous advantages attributable to the SMR.

This is the reason why Hydromine has pushed the simplification of the project to the maximum and sought the maximum compactness to avoid paying this typical penalty of many SMRs. The result is an expected mass reduction of NSSS steels by about 30% per unit of power compared to large LWRs.

The reactor building is compact and not subjected to significant inner pressure and therefore more economical. The penalty on the turbo-generator set can be mitigated by coupling a single turbo-generator set to two or more reactors.

Once, the drawbacks have been eliminated / mitigated, the well-known advantages typical of SMR remain, particularly standardization, shop manufacturing and short construction time.

Despite its potential, political/financial conditions for completion of the R&D and the construction of the LFR-AS-200 prototype have not yet matured; Hydromine realizes that:

- historically, the development of nuclear power began with the construction of small plants.
- there is a potential market for micro reactors.

These two facts suggest the opportunity to proceed gradually towards the realization, in the short term, of a micro LFR-TL-X. This new strategy has many advantages because (i) it facilitates finding the necessary funds for development, (ii) facilitates the licensing process and (iii) reduces the risks associated with the development of innovative systems. The availability of a micro LFR will also allow the qualification in fast flux of the new materials needed for the LFR-AS-200.

Hydromine has carried out economic evaluations of the LFR-AS-200 project with favourable results, but considering that a new technology is involved, R&D is still necessary and there is not yet feedback from the licensing process, it does not consider it appropriate to disclose economic details.

However, design comparisons can be made with the large PWRs, which are the most common systems in operation today.

The exceptionally long time for the construction of the large PWRs has recently reversed the tendency to develop increasingly powerful plants and has revived interest in the SMRs such as the LFR-AS-200 and other reactor concepts.

The increase of power has in fact always been considered advantageous for reducing the amount of structural steels and the number of operators per unit energy produced.

Consequently, the opposite process of power reduction generally leads to an increase of the specific quantity of material (for certain projects even by factor 3) and therefore to an increase of cost that is difficult to offset by the other numerous advantages attributable to the SMR.

This is the reason why Hydromine has pushed the simplification of the project to the maximum and sought the maximum compactness (volume of the primary system per unit power less than 1 m3/MWe) to avoid paying this typical penalty of many SMRs. The result is an expected mass reduction of NSSS steel by about 30% per unit of power compared to large LWRs.

The reactor building is compact and not subjected to significant pressure and therefore more economical. The penalty on the turbo-generator set can be mitigated by the use of a single turbo generator for two or more reactor unit.

System simplification and modularity also help to reduce the number of operators.

Once, for the LFR-AS-200, the drawbacks have been eliminated / mitigated, the well-known advantages typical of SMR remain, particularly standardization, shop manufacturing and short construction time.

Despite its potential, political/financial conditions for completion of the R&D and the construction of the first of a kind LFR-AS-200 have not yet matured.

Hydromine still considers the LFR-AS-200 as its main goal, but also realizes that:

- historically the development of nuclear power began with the construction of small plants.
- that there is a potential market for micro reactors.

These two facts suggest the opportunity to proceed gradually towards the realization, in the short term, of a micro LFR-TL-X in the power range from 5 to 20 MWe. This new strategy has many advantages because (i) it facilitates finding the necessary funds for development, (ii) facilitates the licensing process and (iii) reduces the risks associated with the development of innovative systems. For several applications, the micro reactor can be proposed in the short term with a low temperature thermal cycle, allowing the use of steels already qualified for nuclear application; the availability of a micro LFR with a higher temperature inner channel will also allow qualification in fast flux of structural material needed for the LFR-AS-200 and reduce its development cost.