Status Report 103 – Advanced Power Reactor (APR1000)

Overview

Full Name	Advanced Power Reactor
Acronym	APR 1000
Reactor Type	Pressurised Water Reactor (PWR)
Coolant	Light Water
Moderator	Light Water
Neutron Spectrum	Thermal Neutrons
Thermal Capacity	2815.00 MWth
Gross Electrical Capacity	1050.00 MWe
Design Status	In Operation
Designers	KEPCO/KHNP
Last Update	04-11-2011

Description

1. Introduction

The Advanced Power Reactor 1000 MWe (APR1000) is an evolutionary pressurized water reactor (PWR) which has been developed from the proven design of OPR1000, the Optimum Power Reactor 1000 MWe. The design is based on the experience that has been accumulated through the development, construction, and operation of the OPR1000, the first standard pressurized water reactor (PWR) plant in the Republic of Korea. The APR1000 also utilizes the state-of-the-art proven technology and incorporates a number of advanced design features from the APR1400 to meet the utility's needs for enhanced economic goals and to improved plant safety.

During the 1980s, the Republic of Korea launched the technology self-reliance program on every aspect of a nuclear power plant construction project and accomplished the nuclear technology self-reliance through the OPR1000 design and construction projects. Currently (as of October 2010), a total of 8 OPR1000 units are in operation with excellent performance and 4 units of the latest version of the OPR1000 are under construction and will be in commercial operation in 2010 through 2012. The APR1000 benefits from the proven nuclear power plant design technology gained through repeated construction and vast operating experience of the OPR1000.

The Republic of Korea developed the APR1400 design in 1994, and acquired the standard design approval from Korean regulatory body in May 2002 after design optimization in 2001. The APR1400 was chosen for construction in the Republic of Korea, and the construction project was for the twin units, Shin-Kori units 3&4. The project is in progress with the goal of commercial operation in 2013 and 2014 for units 3 and 4, respectively. Also, the follow-on APR1400 construction projects are either in the early stage, such as Shin-Ulchin units 1&2 with the commercial operation goal in 2016 and 2017, respectively, or in the planning stages at the other sites.

The Republic of Korea has developed the APR1000 design from 2009, which will be completed in 2011 as Phase I project. During the Phase I, the major design goals as well as the design concept are being developed to meet the future demand for ALWRs. The APR1000 is based on the proven OPR1000 design such as Shin-Kori units 1&2, and incorporates

various advanced design features from the APR1400. The preliminary standard safety analysis report (PSSAR) and System description will be issued through Phase I. After the site is determined, the Phase II study for the detailed design will be started. During Phase II, a series of experimental research on the advanced design features will be performed with the site specific design development, despite the advanced design features having been already applied to the APR1400.

The main design philosophy of the APR1000 incorporates several important features, such as the enhancement of safety, the utilization of proven technologies, the creation of a common design adaptable to each country where it is utilized, and a stable construction cost comparable to that of currently operating PWRs. Achieving a higher level of plant safety is an important goal among the various development policies. The following safety goals in terms of measurable criteria are established to upgrade the plant safety level by one order of magnitude compared to those of currently operating plants in the Republic of Korea.

The major design requirements for safety and performance goals set for APR1000 are listed in Table 1.

Table 1. The APR1000 design requirement for safety and performance goals

General Requirement	**Performance requirements and economic goals**
Type and capacity : PWR, 1050 MWe Plant lifetime: 60 years Seismic design: SSE 0.3g Safety goals: Core damage frequency < 1.0E-5/RY Large release frequency < 1.0E-6/RY Occupational radiation exposure < 1 man -Sv / RY	Plant availability: more than 90% Unplanned trips: less than 0.8 per year Refueling interval: 18 ~ 24 months Operability: Fully Digitalized MMIS Construction period: 40 months (N-th plant)

Since the APR1000 has been evolved from the OPR1000, the basic configuration of the nuclear steam supply system is the same. As shown in Figure 1, the APR1000 has two primary coolant loops and each loop has one steam generator and two reactor coolant pumps in one hot leg and two cold legs arrangement. This two loop/four pump configuration of the reactor coolant system is a well proven design concept through highly reliable operation experience of the OPR1000 plants.

The APR1000 has several advanced features such as the passive fluidic device in the safety injection tank, reactor cavity flooding system, in-vessel retention external reactor vessel cooling system, advanced safety depressurization system, and systems for severe accident mitigation and management. The advanced main control room, designed with the consideration of human factors, with full-digital man machine interface system is another example of the design improvement. Moreover, the general arrangement of the APR1000 has been improved with the reflection of operation and construction experiences of the OPR1000 and the APR1400.

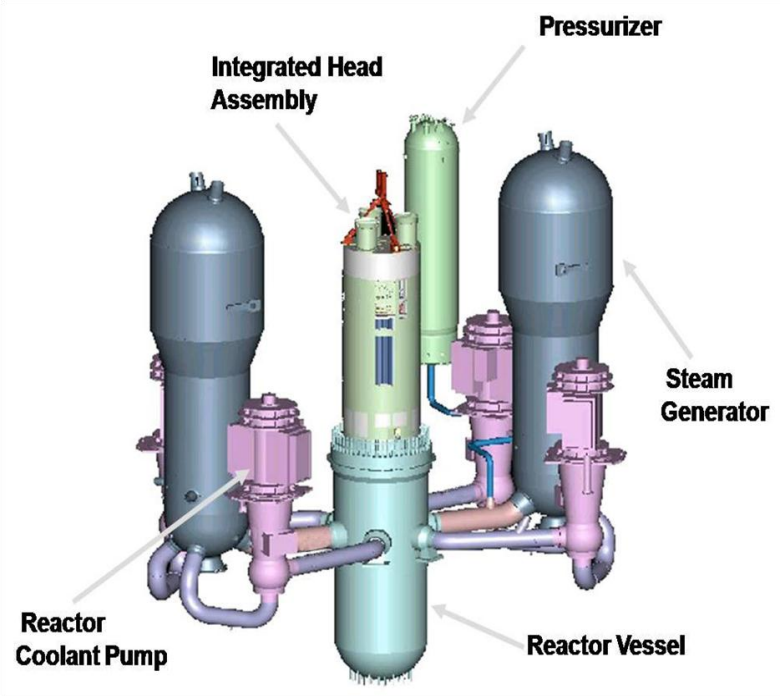

Figure 1. The APR1000 Reactor Coolant System Configuration

2. Description of the Nuclear Systems

2.1 Primary circuit and its main characteristics

The primary loop configuration of the APR1000 is same as the OPR1000, which has two reactor coolant loops. The nuclear steam supply system is designed to operate at a rated thermal output of 2,815 MWt to produce the gross electric power output of around 1,050 MWe in the turbine/generator system. The major components of the primary circuit are the reactor vessel, two reactor coolant loops, each containing one hot leg, two cold legs, one steam generator (SG), and two reactor coolant pumps (RCPs), and a pressurizer (PZR) connected to one of the hot legs. The two steam generators (SGs) and the four RCPs are arranged symmetrically. The steam generators are located at a higher elevation than the reactor vessel for natural circulation. The steam generators provide an interface between the reactor coolant (primary) system and the main feedwater and steam (secondary) system. The steam generators are vertical U-tube heat exchangers with an integral economizer in which heat is transferred from the primary system to the secondary system. Reactor coolant is prevented from mixing with the secondary steam by the steam generator tubes and the steam generator tube sheet, making the RCS a closed system, thus forming a barrier to the release of radioactive materials from the reactor core to the containment building and the secondary system. For vent and drain, the elevation of the PZR and the surge line is higher than that of reactor coolant piping. A schematic diagram of arrangements and locations of the primary components are in Figure 2.

Overpressure protection for the reactor coolant pressure boundary is provided by three pilot operated safety relief valves (POSRVs) which are connected to the top of the pressurizer. The POSRVs are designed to be performed the functions of the RCS overpressure protection during the design bases accidents and the manual depressurization in the cases of beyond design basis accidents such as a total loss of feedwater (TLOFW) event. Moreover, additional

rapid depressurization valves are installed on the top of the pressurizer to prevent direct containment heating (DCH) during severe accidents. Overpressure protection for the secondary side of the steam generators is provided by spring-loaded safety valves located in the main steam system upstream of the steam line isolation valves.

The main design concepts of the RCS are given below:

The major components of the reactor coolant system (RCS) are designed to withstand the forces associated with the design basis pipe breaks in combination with the forces associated with the safe shutdown earthquake and normal operating conditions.

The coolant temperature in the RV head region is reduced as low as that of the coolant in the cold leg. The reduced temperature of the RV head helps to alleviate the PWSCC concerns for CEA guide tubes penetrating the RV upper head.

Design changes are made to the reactor internals to increase the cold coolant flow from the RV downcomer to the upper head region by optimizing the coolant flow path areas into and out of the upper head.

IHA cable routing of the APR1000 is improved from the OPR1000 design. The routing is performed from RDP through the integrated platform which is outside the IHA. The cable routing is improved by a cable bridge.

The safety injection system (SIS) is designed to improve the system operability and reliability. One of the improved design features is the passive fluidic device in safety injection tank (SIT), which regulates the injection flow rate effectively in the event of loss of coolant accident (LOCA). The fluidic device initially delivers safety injection water with high flow rate for a certain period of time, after which the flow rate is reduced.

The leak before break (LBB) scheme is applied to the high energy pipings such as RCS pipings, the PZR surgeline, SI/SCS piping and Main Steam piping.

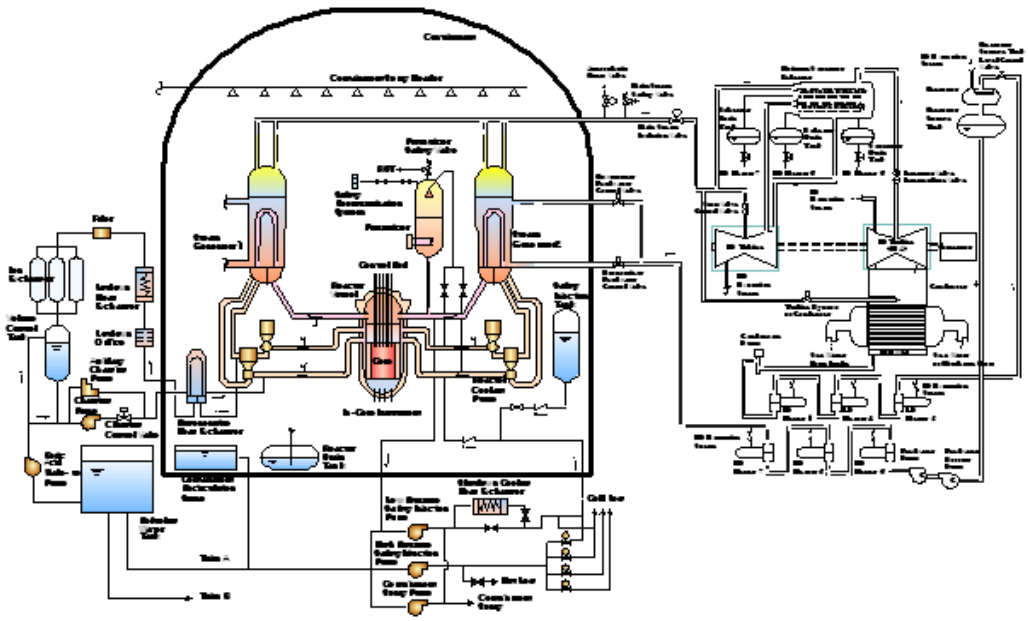

Figure 2. Schematic diagram of primary components

2.2 Reactor core and fuel design

The reactor core of the APR1000 is composed of 177 fuel assemblies and 73 or more control element assemblies (CEAs). The fuel assemblies are arranged to approximate a right circular cylinder, provides for 236 fuel rod positions (a 16 x 16 array), which includes four guide tubes and one instrumentation tube welded to spacer grids and is closed at the top and the bottom by end fittings. Each guide tube each occupies four fuel rod positions and provide channels which guide the CEAs over their entire length of travel. The in-core instrumentation is routed into the bottom of the fuel assemblies through the bottom head of the reactor vessel.

The fuel has low enrichment UO_2 in the form of ceramic pellets that are encapsulated in pre-pressurized ZIRLO tubes which form a hermetic enclosure.

The fuel assembly, known as PLUS7^{TM} consists of fuel rods, spacer grids, guide tubes, and upper and lower end fittings. 236 locations of each fuel assembly are occupied by fuel rods containing UO_2 pellets or burnable absorber rods containing Gd_2O_3-UO_2 in a 16 × 16 array. The remaining locations are 4 CEA guide tubes and one in-core instrumentation guide tube to monitor the neutron flux shape in the core. Each guide tube is attached to fuel assembly spacer grids and to upper and lower end fittings to provide a structural frame to position the fuel rods. The absorber materials used for full-strength control rods are boron carbide (B4C) pellets, while Inconel alloy 625 is used as the absorber material for the part-strength control rods

The PLUS7^{TM} assembly is enhanced in the thermal hydraulic and nuclear performance and structural integrity compared to conventional fuel assembly in several ways. Mixing vanes capable of high thermal performance, which induce relatively low pressure loss, are adopted in all mid-grids; these increase the thermal margin to more than 10 %, as confirmed in a critical heat flux (CHF) test. A schematic diagram of fuel assembly is shown in Figure 3.

The batch average burnup is increased to 55,000 MWD/MTU through the optimization of the fuel assembly and fuel rod dimensions and by adopting advanced Zr-Nb alloy as fuel cladding.

The neutron economy is improved with the introduction of axial blankets at both ends of pellet region and by optimizing the fuel rod diameter. The mid-grid buckling strength was increased using straight grid straps and by optimizing grid height. These design improvements increase the seismic resistance of the fuel assembly so that it maintains its integrity even under severe seismic-related accidents.

The conformal type contact geometry between the mid-grid spring and the fuel rods increase the in-between contact area to improve the resistance capacity against fretting wear. A debris-filter bottom nozzle (DFBN) is adopted to trap most debris before it enters the fuel assembly. This increases the debris filtering efficiency by reducing the number of fretting wear-induced fuel failures.

The core is designed for refuelling cycles of 18 months through 24 months with a maximum discharge rod burnup and for the thermal margin to be increased. This core design leads to improvements in the economic efficiency and the safety by increasing the plant availability factor through elongating of the refuelling cycle and a reduction in the number of unplanned reactor trips.

The reactor core is capable of achieving daily load follow and frequency control and of loading 30% mixed oxide (MOX) fuels instead of UO_2 fuels, resulting in upgraded operational flexibility.

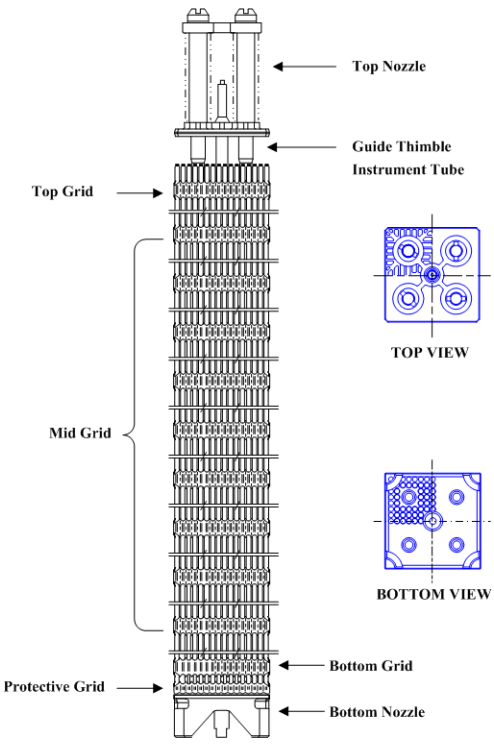

Figure 3. Fuel Assembly

2.3 Fuel handling and transfer systems

The fuel handling system is designed for the safe and rapid handling and storage of fuel assemblies from the receipt of fresh fuel to the shipment of spent fuel.

The major equipment of the system comprises the refuelling machine, the CEA change platform, the fuel transfer system, the fresh fuel elevator, the CEA elevator and the spent fuel handling machine. The refuelling machine is located in the containment building and moves fuel assemblies into and out of the reactor core and between the core and the fuel transfer system. The spent fuel handling machine, located in the fuel building, carries fuel to and from the fuel transfer system, the fresh fuel elevator, the spent fuel storage racks, and the spent fuel shipping cask areas.

The underwater transfer of fuel assemblies provides a transparent radiation shield, as well as a cooling medium for the removal of decay heat. Boric acid is added to the spent fuel pool (SFP) water in the quantity required to assure subcritical conditions.

2.4 Primary components

2.4.1 Reactor pressure vessel

The reactor pressure vessel is a vertically mounted cylindrical vessel with a hemispherical lower head welded to the vessel and a removable hemispherical closure head as shown in Figure 4. The reactor pressure vessel contains internal structures, core support structures, fuel assemblies, control rod assemblies, and control and instrumentation components.

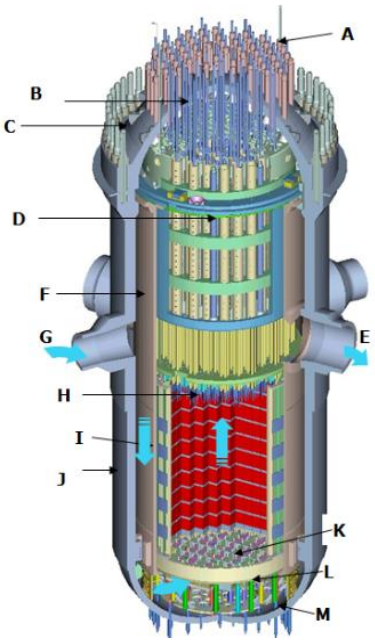

A: Control element assembly nozzles
B: Control element assembly extension shafts
C: Reactor vessel closure head assembly
D: Upper guide structure
E: Outlet nozzles
F: Core support barrel
G: Inlet nozzles
H: Fuel assemblies
I: Core shroud
J: Reactor vessel
K: Lower support structure
L: Flow skirt
M: Bottom head nozzles

Figure 4. Reactor of the APR1000

The structural integrity of the reactor pressure vessel is verified through a structural sizing and fatigue evaluation, which is based on the stress analyse of the heads, shell and nozzles under thermal and pressure loads.

The life time of the reactor pressure vessel is extended to 60 years by the use of low carbon steel, which has lower contents of Cu, Ni, P, S as compared to the current material, resulting in an increase of brittle fracture toughness.

The reactor vessel is basically manufactured with a vessel flange, a hemispherical bottom head, and three shell sections of upper, intermediate and lower. The vessel flange is a forged ring with a machined ledge on the inside surface to support the core support barrel, which in turn supports the reactor internals and the core. The three shell sections (upper, intermediate, and lower), the bottom head forging and vessel flange forging are joined together by welding. Also, four inlet nozzle forgings, two outlet nozzle forgings, and forty five ICI nozzles are also welded. The upper closure head is fabricated separately and is joined to the reactor vessel by bolting. The dome and flange are welded together to form the upper closure head, on which the control element drive mechanism (CEDM) nozzles are welded. The vessel flange is a forged ring with a machined ledge on the inside surface to support the core support barrel, which in turn supports the reactor internals and the core.

2.4.2 Reactor internals

The reactor internals consist of the core support structures, which include the core support barrel assembly, upper guide structure assembly and lower support structure, and the internal structures. The core support barrel assembly is designed to support and orient the reactor core

fuel assemblies and control element assemblies, and to direct the reactor coolant to the core. The primary coolant flows in through the reactor vessel inlet nozzles from the reactor coolant pump, passes through the annulus between the reactor vessel and core support barrel, through the reactor vessel bottom plenum and core, and finally flows out through the outlet nozzles of the reactor vessel connected to the hot legs.

The core support barrel assembly and the upper guide structure are supported at its upper flange from a ledge in the reactor vessel flange. The flange thickness is increased to sustain the enhanced seismic requirements. All reactor internals are manufactured with austenitic stainless steel except for the hold-down ring, which is made of high-tension stainless steel. The hold-down ring absorbs vibrations caused by the axial load of internal structures.

The upper guide structure, which consists of the fuel assembly alignment plate, control element shroud tubes, upper guide structure base plate, CEA shrouds, and an upper guide structure support barrel, is removed from the core as a single unit during refuelling by means of special lifting rig.

2.4.3 Steam generators

The APR1000 has two steam generators (SG) for the transfer of heat from the primary system to the secondary system. One steam generator is located in each loop. Each steam generator is a recirculating type vertical U-tube heat exchanger with an integral axial flow economizer, which operates with the RCS coolant in the tube side and secondary coolant in the shell side as shown in Figure 5. The two SGs are designed to transfer the heat of 2,815 MWt from the RCS to the secondary system. The secondary system produces steam to drive the turbine-generator, which generates the gross electrical power of 1,050 MWe.

Moisture separators and steam dryers in the shell side limit the moisture content of the exit steam less than 0.25 w/o during normal full power operation. An integral flow restrictor is equipped in each SG steam nozzle to restrict the discharge flow in the event of a steam line break. For the maintenance, inspection of equipment condition, and tube-sheet sludge lancing, each SG has man-ways in the cold leg and hot leg side of primary system. Also, two man-ways of the secondary side, an internal hatch over the top of the tube bundle, two hand-holes at the tube-sheet region are provided.

The APR1000 SG uses 8,340 tubes per SG with Alloy 690 as tube material. The upper tube support bar and plate are designed to prevent SG tubes from flow induced vibration. In order to improve the operating margin of the steam generator, the SG tube plugging margin is increased up to 10%. The water volume of SG secondary side is sufficient to provide the dry-out time up to 20 minutes in the event of total loss of feed-water (TLOFW). This design enhances the capability of alleviating the transients during normal operation by reducing the potential for unplanned reactor trip and the plant safety and the operational flexibility.

To improve the operability, the angle of nozzle in the hot leg side of the primary system is modified to enhance the stability of mid-loop operation. The SG water level control system is designed in such a way that the water level is controlled automatically over the full power operating range.

The economizer feedwater nozzle provides a passage of feedwater to the economizer, which is installed to increase the thermal efficiency of the steam generator at the cold side, and experiences a high temperature gradient. The feedwater nozzles are designed to endure the excessive thermal stress which causes an excessively large fatigue usage factor. The downcomer feedwater nozzle attached in the upper shell of SG also provides small portion of feedwater to the downcomer to facilitate internal recirculation flow. 10% of full power feedwater flow is provided to the downcomer feedwater nozzle and the remaining to the

economizer nozzle at a reactor power higher than 15%, below which all feedwater is supplied to the donwncomer nozzle.

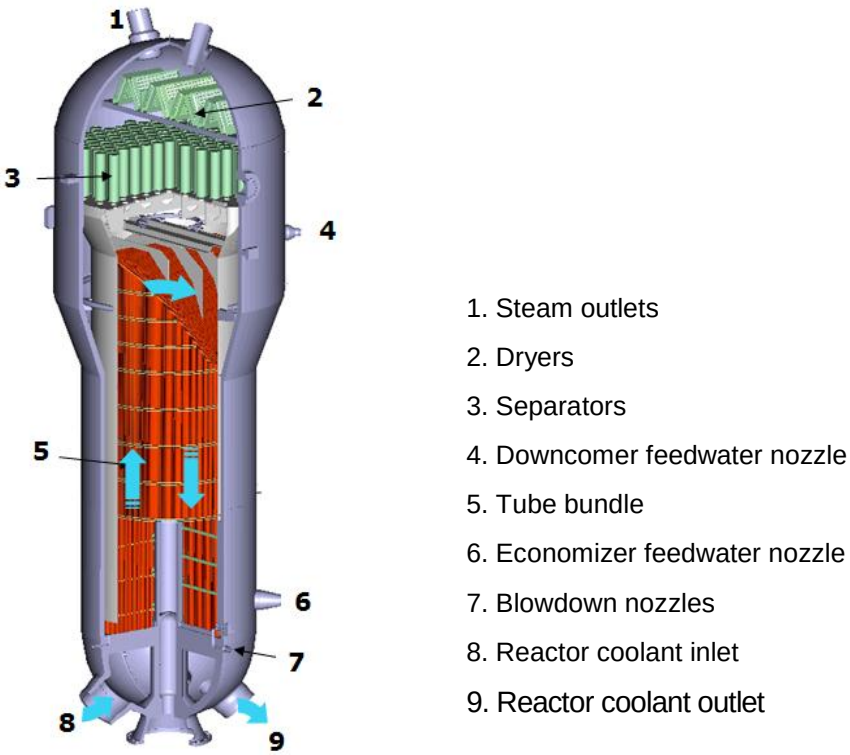

Figure 5. Steam Generator

2.4.4 Pressurizer

The pressurizer is a vertically mounted cylindrical pressure vessel. Replaceable direct immersion electric heaters are vertically mounted in the bottom head. The pressurizer is furnished with nozzles for the spray, surge, pilot operated safety relief valves (POSRVs), and pressure and level instrumentations. A man-way is provided on the top head for access for inspection of the pressurizer internal. The pressurizer surge line is connected to one of the reactor coolant hot legs and the spray lines are connected to two of the cold legs at the reactor coolant pump discharge. The pressurizer maintains RCS pressure and inventory within specified limits in conjunction with the pressurizer pressure and level control systems against all normal and upset operating conditions without reactor trip.

The pressurizer, having a total internal free volume of 51.0 m^3, is to maintain the operating pressure and temperature of the reactor coolant system. Three POSRVs are adopted instead of two safety depressurization system (SDS) valves and three pressurizer safety valve (PSV) of the conventional plant. It provides more reliability in overpressure protection function and more convenience in maintenance activities. The RCS inventory that would discharge through the POSRV under accident conditions is directed to the reactor drain tank (RDT).

2.4.5 Integrated head assembly (IHA)

The reactor vessel upper closure head area of the conventional plant consists of CEDM cooling system, cooling shroud assembly, heated junction thermocouples, missile shielding structure, and head lift rig. These components are usually disassembled, separately stored, and

reassembled during every refuelling outage. The IHA is a structure to combine and integrate all the structures around the reactor vessel closure head area into one assembly as shown in Figure 6.

The primary purpose of the IHA is to assemble all the head area structures, components, and cable system and their supports into one assembly so that the refuelling time can be reduced from maintenance activities such as installation and removal of head area components. Also, the IHA contributes to the reduction of radiation exposures to the maintenance crew since the dissembling and assembling time of the reactor vessel head is reduced.

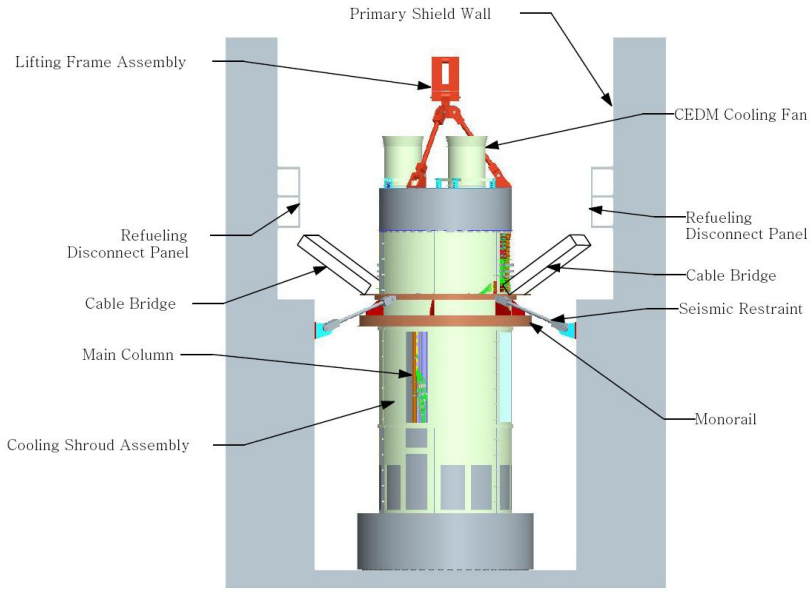

Figure 6. Integrated Head Assembly

2.4.6 Reactor coolant pumps

The reactor coolant pumps circulate the coolant between the reactor vessel and the steam generators for heat transfer from the reactor core to the secondary side of SGs. There are two pumps for each coolant loop, located in each cold leg. The pump is a single-stage centrifugal unit of vertical type, driven by a 9,000 hp electric motor. Leak-tightness of the shaft is ensured by a mechanical seal designed to prevent leaking against the full internal pressure in the pump.

2.4.7 RCS Piping

The leak before break (LBB) concept is adopted for the piping system of APR1000, since the pipe whip restraint and the support for the jet impingement shield in the piping system of earlier plants are expensive to build and maintain, and lead to a potential degradation of plant safety. The LBB concept is applied to the main coolant lines, surge lines, pipes in the shutdown cooling system and the safety injection system, and main steam line. The application of LBB reduces the redundant supports of the pipe in the related system since the dynamic effects of postulated ruptures in the piping system can be eliminated from the design basis. Therefore, the cost of design, construction and maintenance is reduced.

2.5 Reactor auxiliary systems

2.5.1 Chemical and volume control system (CVCS)

The CVCS of APR1000 is not required to perform safety functions such as safe shutdown and accident mitigation. This system is basically for the normal operation of the plant. The components related to charging and letdown function, however, are designed as a safety grade and reinforced to assure the reliability for the normal and transient conditions. Two centrifugal charging pumps, one reciprocating pump and a flow control valve provide required charging flow. For normal operation, only one charging pump is used to supply the required minimum flow.

The letdown flow from the reactor coolant system passes through the regenerative and letdown heat exchangers, where an initial temperature reduction takes place. Pressure reduction occurs at the letdown orifice and the letdown control valve. Following temperature and pressure reduction, the flow passes through a purification process at the filters and ion exchangers. After passing through the purification process, the letdown flow is diverted into the volume control tank (VCT) which is designed to provide a reservoir of reactor coolant for the charging pumps.

2.5.2 Component cooling water system

The component cooling water system (CCWS) is a closed loop cooling system that, in conjunction with the essential service water system (ESWS) and ultimate heat sink (UHS), removes heat generated from the plant's essential and non-essential components connected to the CCWS. Heat transferred by these components to the CCWS is removed to the ESWS via the component cooling water heat exchangers. The CCWS consists of two independent, redundant trains serving safety-related components and non-safety-related components.

2.5.3 Reactor coolant gas vent system (RCGVS)

The RCGVS provides a safety-grade means of venting non-condensible gases remotely from the reactor vessel head and the pressurizer steam space during post-accident conditions, when large amount of non-condensible gases may collect in these high spots. The RCGVS is designed to vent gas to reactor drain tank (RDT) or containment atmosphere.

2.5.4 Steam generator blowdown system

The steam generator blowdown system consists of two subsystem, blowdown subsystem (BDS) and wet layup subsystem (WLS). The continuous blowdown from each steam generator secondary side maintains the water chemistry within the limits during normal power operation. The high capacity blowdown is provided to periodically remove any accumulated sludge near the steam generator tube sheet area during normal power operation. The WLS is designed to maintain the steam generator secondary side water chemistry within the specified limits during shutdown operation.

2.5.5 Primary sampling system

The primary sampling system is designed to collect and deliver representative samples of liquids and gases in various process systems to the sample station for chemical and radiological analysis. The system permits sampling during normal operation, cooldown and post-accident modes without requiring access to the containment. Remote samples can be taken from the fluids in high radiation areas without requiring access to these areas.

2.6 Operating Modes

The APR1000 is designed to be used for various operating modes not only for the base load full power operation but also for a part load operation such as the load following operation. A standard

daily load follow operation has been considered in the reactor core design as well as in the plant control systems.

In addition, various load maneuvering capabilities are considered in the design such as up to 10% step change in load, ±5%/min ramp load changes. Also, it has the house load operation capability during a sudden loss of load up to 100% (full load rejection) in which plant control systems automatically control the plant at 3~5% power level without causing any reactor trips or safety system actuations.

In case of turbine generator trip from any power levels including full power, the APR1000 prevents reactor trip and maintains reactor power at reduced level using reactor power cutback system (RPCS) and other control systems. This feature shortens outage time to return to power operation after a problem shooting and enhances plant safety by preventing unnecessary reactor trips. Also, the APR1000 control system automatically controls plant parameters and prevents reactor trip during a loss of one or two operating main feedwater pumps event occurring at 100% power operation with 3rd main feedwater pumps in service.

2.7 Fuel Cycle and Fuel Options

The APR1000 is a typical PWR plant using slightly enriched uranium and, hence, is not designed as a breeder or a high-converter reactor. However, the reactor core and other related systems are designed to use MOX fuel up to 1/3 of core. The spent fuel treatment plan is beyond the plant design scope.

3. Description of Safety Concept

3.1 Safety requirements and design philosophy

Safety is a requirement of paramount importance for nuclear power. One of the APR1000 development policies is to increase the level of safety significantly. Safety and economics in nuclear power plants are not counteracting each other but can move in the same direction, since the enhancement of safety will also yield an improved protection of the owner's investment. Therefore, safety has been given top priority in developing the new design. To implement this policy, in addition to the established licensing design basis to meet the licensing rules, the APR1000 is designed to meet these safety goals with securing an additional safety margin to protect the owner's investment as well as the public health.

In order to implement this safety objective, quantitative safety goals for the design were established in a probabilistic approach:

- The total core damage frequency (CDF) shall not exceed 10^{-5}/RY for both internal and external initiating events.
- The large release frequency (LRF) shall be less than 10^{-6}/RY.

To achieve the above quantitative goals, the defense-in-depth concept remains as a fundamental principle of safety, requiring a balance between accident prevention and mitigation. With respect to accident prevention, the increased design margin and system simplification represent a major design improvement and the consideration of accident mitigation call for the incorporation of design features to cope with severe accidents as well as design basis accidents.

The safety analysis of the APR1000 is performed to demonstrate the performance of the components, its operating systems, and its safety systems under a wide spectrum of anticipated events and postulated accidents. The safety analysis based on deterministic methods is complemented by a probabilistic safety assessment (PSA). The deterministic method starts with the step of specifying the scenarios. This step is composed of initiating events and component failures that are assumed to occur. The scenarios are specified to include even highly unlikely events, and acceptance criteria are specified by applying regulatory requirements. For a probabilistic assessment, realistic quantitative information as regards the occurrence of various events and the conditions and the reliability of components are used to assess the probability of failure of the operational and safety systems of the plant.

The design characteristics for the severe accident mitigation of the APR1000 are intended to prevent or to mitigate containment over-pressurization, hydrogen control issues, direct containment heating and steam explosions, and equipment survivability issues. These severe accident mitigation features of the APR1000 are reviewed along with their effects on the phenomenological response of the plant against the severe accidents to assess how adequately they satisfy the licensing requirements.

The enhanced margin could benefit the operability and availability of the nuclear power plants. For example, the margin can alleviate transients, thereby avoiding unexpected trips, and be used for later system modification or the adaptation of new regulatory restriction. A few examples of the design requirements following this philosophy are the requested core thermal margin of more than 10%, sufficient system capacity for the prolonged operator response time on the transient events, and station blackout coping time.

3.2 Safety systems and features (active, passive and inherent)

The engineered safety features (ESF) systems of the APR1000 are designed to be a hybrid system in which the active and passive systems perform necessary safety functions. The major safety systems are the safety injection system, safety depressurization and vent system, refuelling water storage system, shutdown cooling system, auxiliary feedwater supply system, and containment spray system.

The ESF systems provide protection in the highly unlikely event of an accidental release of radioactive fission products from the reactor coolant system (RCS), particularly as the result of a loss-of-coolant accident (LOCA). The ESF systems consist of containment system, safety injection system, containment spray system. The containment provides missile shielding for safety class equipment in order to limit the consequences of a failure of the reactor coolant system pressure boundary. Containment isolation features provide for automatic containment isolation upon receipt of a containment isolation actuation signal, containment spray actuation signal, or containment purge isolation actuation signal. In order to maintain the function of the containment in the event of an severe accident resulting in a degradation of reactor core, specific design features incorporated in the APR1000 design are external reactor vessel cooling, reactor pressure vessel thermal insulation, cavity flooding system, and reactor cavity design.

3.2.1 Safety injection system (SIS)

The Safety Injection System or Emergency Core Cooling System provides core cooling in the event of a loss of coolant accident. The Safety Injection System is designed to supply sufficient cooling to prevent significant alteration of core geometry, to preclude fuel melting, to limit the cladding metal-water reaction, and to remove the energy generated in the core for an extended period of time following a loss of coolant accident. The APR1000 Safety Injection System (SIS) utilizes two high pressure safety injection (HPSI) and two low pressure safety injection (LPSI) pumps to inject borated water into the Reactor Vessel as shown in Figure 7.

The main design concept of the safety injection system (SIS) is simplification and diversity to achieve higher reliability and better performance. The safety injection system is comprised of two independent mechanical trains and two electrical divisions. Each train has two active safety injection pump (SIP) and two passive safety injection tank (SIT) equipped with a fluidic device (FD).

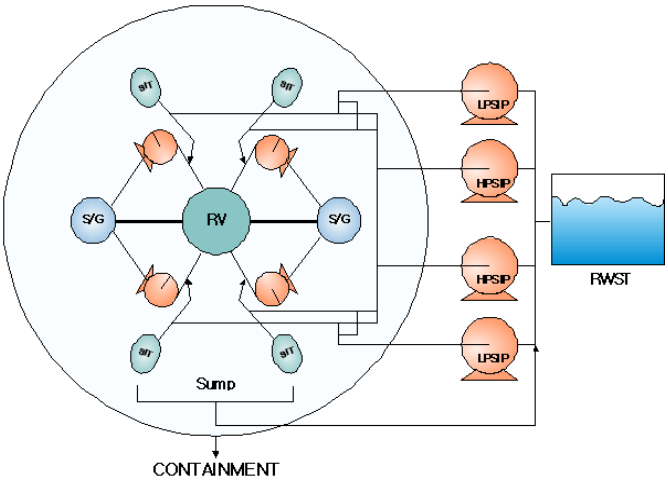

Figure 7. Safety Injection System

3.2.2 Fluidic device (FD)

The APR1000 uses a passive flow regulator, that is, the FD is installed in the SIT. The basic concept of the FD is vortex flow resistance. When water flows through the stand pipe, which is installed in a rectangular direction with the exit nozzle, it creates low vortex resistance and a high flow rate. When water level is below the top of the stand pipe, inlet flow is switched to the control ports which are installed in a tangential direction with the exit nozzle, and it makes a high vortex resistance and low flow rate as shown in Figure 8. Thereby, this design feature enables the APR1000 to achieve the goals of minimizing the ECC bypass during a blowdown, and of preventing a spillage of excess ECC water during the refill and reflood phases of a large-break LOCA (LBLOCA).

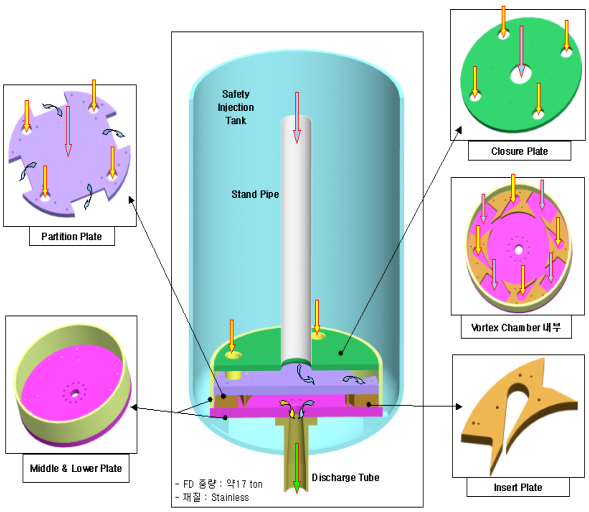

Figure 8. Fluidic Device in SIT

3.2.3 Shutdown cooling system (SCS)

The shutdown cooling system is a safety-related system that is used in conjunction with the main steam and main or auxiliary feedwater system to reduce the RCS temperature in post shutdown periods from the hot shutdown operating temperature to the refueling temperature. The shutdown cooling system consists of two independent subsystems, each utilizing a low-pressure safety injection pump to circulate coolant through a shutdown cooling heat exchanger.

After initial heat rejection through the SGs to the condenser or atmosphere, the SCS is put into operation at 176.7 ^{o}C and 28.82 kg/cm^2 A. The initial cool-down is accomplished by heat removal to the secondary side of the steam generators and then by releasing steam via the steam bypass system or atmospheric dump valves.

During the shutdown cooling process, the reactor coolant flows out of the Reactor Coolant System through the shutdown cooling nozzles located on each hot leg. Reactor coolant is circulated by the LPSI pumps through the shutdown cooling heat exchangers and then returned to the reactor coolant system through four low-pressure safety injection lines into the cold leg piping. The cool down rate is controlled by adjusting the flow through the heat exchangers with a throttle valve on the discharge of each heat exchanger.

3.2.4 Auxiliary feedwater system

The auxiliary feedwater system (AFWS) is a dedicated safety system designed to supply feedwater to the SGs for removal of heat from the RCS for events in which the main or startup feedwater systems are unavailable. In addition, the AFWS refills the SGs following the steam generator tube rupture to minimize leakage through the ruptured tubes. The auxiliary feedwater system is an independent 2-division system, one for each SG, and each division has 2 trains. The reliability of the AFWS has been increased by use of one 100% capacity motor-driven pump and one 100% capacity turbine-driven pump for diversity and redundancy and one dedicated safety-related auxiliary feedwater storage tank in each division as a water source in addition to the non-safety grade condensate storage tank as a backup source.

3.2.5 Safety depressurization and vent system (SDVS)

The SDVS is a dedicated safety system designed to provide a safety grade means to depressurize the RCS in the event that pressurizer spray is unavailable during plant cooldown to cold shutdown and to depressurize rapidly the RCS to initiate the feed and bleed method of plant cooldown subsequent to the total loss of feed-water event. The Pilot Operated Safety Relief Valves (POSRVs) are employed for feed and bleed operation. This system establishes a flow path for steam from the pressurizer to the reactor drain tank.

3.2.6 Containment spray system (CSS)

The CSS consists of two trains and takes the suction from the refueling water tank (RWT) to reduce the pressure and temperature in the containment atmosphere below containment design limits following a postulated loss-of-coolant-accident (LOCA), and to remove radioactive fission products from the containment atmosphere. These functions are performed by spraying water into the containment atmosphere through a large number of main spray nozzles on spray headers located in the containment dome and a large number of auxiliary spray nozzles on spray headers located under the operating floor.

Initially, water from the refueling water tank (RWT) is used as the water source for containment spray, and under the recirculation phase, each train takes suction from separate containment recirculation sumps.

3.3 Severe accidents (beyond design basis accidents)

The APR1000 design features for severe accident mitigation include (1) a large dry prestressed concrete primary containment, (2) a large reactor cavity designed for retention of core debris, (3) a reactor cavity flooding system to cool down the core debris in reactor cavity, (4) a hydrogen mitigation system to prevent in-containment hydrogen concentration from reaching detonation levels, (5) a depressurization system for a severe accident, and (6) a shutdown cooling, and (7) a provision for containment venting.

3.3.1 Reactor Cavity

The APR1000 reactor cavity is configured to promote retention of, and heat removal from, the postulated core debris during a severe accident, thus, serving several roles in accident mitigation. Corium retention in the core debris chamber virtually eliminates the potential for significant direct containment heating (DCH) induced containment loadings. The large cavity floor area, which is more than 0.02 m^2/MWt, allows for spreading of the core debris enhancing its coolability within the reactor cavity region.

The important features of the APR1000 cavity include a large cavity volume, a closed vertical instrument shaft, a convoluted gas vent, a large recessed corium debris chamber, a large cavity floor area, a minimum concrete thickness of 3 feet from the cavity floor to the containment embedded shell, and robust cavity strength.

3.3.2 Cavity flooding system

The cavity flooding system (CFS) is to provide a means of flooding the reactor cavity during a severe accident for the purpose of cooling the core debris in the reactor cavity and scrubbing fission product releases. The water delivery from the dedicated cavity flooding tank to the reactor cavity is accomplished by means of active attributes.

When external reactor vessel cooling is not possible, the cavity flooding system (CFS) will be actuated in the time period following core uncovery and prior to or after a vessel breach. The Cavity Flooding System provides an operator initiated mechanism to flood the reactor cavity to the level of just below hot leg centerline.

The CFS takes water from the dedicated cavity flooding tank and directs it to the reactor cavity.

3.3.3 Hydrogen Igniter System

During a degraded core accident, hydrogen will be produced at a greater rate than that of the design basis LOCA. The hydrogen igniter system (HIS) for severe accident is designed to accommodate the hydrogen production from 100% fuel clad metal-water reaction and limit the average hydrogen concentration in containment to 10%. The HIS consists of glow plug igniters.

The glow plug igniter is an AC-powered glow plug powered directly from a step down transformer. Each igniter assembly is protected by a steel enclosure which contains the electrical connections and partially encloses the igniter. The enclosure meets National Electrical Manufacturers Association (NEMA) Type 4 specifications for water-tight integrity under various environmental conditions, including exposure to water jets. The sealed enclosure incorporates a heat shield to minimize the temperature rise inside the igniter assembly, and a spray shield to reduce water impingement on the glow plug from above. The igniter assembly is designed to meet Seismic Category I requirements.

The igniters are powered from Class 1E buses. In the event of a loss of off-site power, the igniters will be powered from one of the emergency diesel generators. On loss of off-site power and failure

of one of the emergency diesel generators to start or run (i.e., Station Blackout), the igniters can be powered from the AAC facility.

3.3.4 Rapid Depressurization Valves

The rapid depressurization valves (RDVs) for severe accidents are mounted in the top of the pressurizer to drop the RCS pressure rapidly to prevent high pressure ejection of molten core, which induces the direct containment heating. The RDV is manually operated in the event of a severe accident in the MCR.

3.3.5 In-Vessel Retention and External Reactor Vessel Cooling (IVR-ERVC)

The probabilistic safety assessments (PSAs) of various PWRs, including the APR1000, clearly show that the threat to containment integrity is reduced if the reactor vessel does not fail or fails at low pressure. The rapid depressurization using POSRVs or DPVs would render RCS pressure low enough to allow external reactor vessel cooling (ERVC) and/or recovered safety injection to prevent reactor vessel failure.

For the APR1000, external reactor vessel cooling (ERVC) is adopted as a strategy for preventing or mitigating a severe accident as a defense in depth strategy. ERVC involves submerging the exterior surface of the reactor pressure vessel (RPV) under a hypothetical severe accident condition, in order to avoid or delay reactor pressure vessel melt-through by cooling the external reactor pressure vessel. The insulating structure provides a pathway for the cooling water into the vessel.

For ERVC, the RCS pressure should be low or should be sufficiently lowered and the RPV bottom head should be submerged before molten core debris relocation into the reactor vessel lower plenum to prevent reactor vessel creep rupture and thermal shock. This depressurization is accomplished by POSRVs or RDVs.

ERVC can be actuated once a core melt condition has been diagnosed as being in progress. Typical indications of core melt may include (1) core exit thermocouple, (2) reactor vessel level monitoring system (RVLMS) readings, and (3) readings of the self-powered neutron detectors (SPNDs).

3.3.6 Reactor Pressure Vessel Thermal Insulation

ERVC performs the function of submerging the exterior surface of the reactor pressure vessel (RPV) to avoid or delay-reactor pressure vessel melt-through by cooling the external reactor pressure vessel. The reactor pressure vessel thermal insulating structure provides a pathway for the cooling water into the vessel.

The thermal insulation structure is designed considering the mechanical system design aspects as following:

• A passive attribute allowing ingression of the water in the reactor cavity into the space between the insulation and the reactor vessel is installed on the RPV insulation to the extent possible as allowed by the reactor vessel insulation design.

• A passive attribute allowing the venting of steam generated inside the insulation space by decay power in the RPV is installed on the RPV insulation. A steam venting device in the form of a steam damper is specially designed to perform the required functions.

• The RPV support column base plate shall not be directly exposed to the RPV exterior surface due to the enlarged gap and the added attributes of the RPV insulation for ERVC.

• The RPV insulation support retains the configuration of the insulation under the maximum buoyancy force imposed by water flooding outside the RPV insulation in the reactor cavity.

• The adverse effects on the RCS structural integrity, including RPV pressurized thermal shock will not be evaluated in the event of a severe accident or inadvertent operations of the ERVC systems.

3.3.7 Provision for Containment Venting

Containment vent is provided for the APR1000 only for provision. However, the vent of the containment, using the containment hydrogen purge system to depressurize and thus prevent uncontrollable catastrophic overpressure failure of the containment in the event of a severe accident, can be considered as one of the severe accident management procedures.

Under severe accidents in general, this is not a desired mode of pressure control as it may be associated with deliberate releases of fission products. However, should the containment spray system (CSS) be unavailable and not expected to come back, the use of the purge vent will be a beneficial action even if the valve cannot be closed later because the alternative would be an uncontrollable catastrophic containment failure. Moreover, the containment vent can be used in conjunction with external spray to both extend containment integrity and mitigate vent fission product releases.

3.4 Containment building design for severe accident

In order to maintain the integrity of the RCB and prevent the leakage of radioactive materials against severe accidents, the RCB is designed to have enough free volume for the load to be below ASME Section III Service Level C in 24 hours following the onset of core damage. Another design feature to prevent leakage is installation of the 1/4 inch steel liner plate on the inboard side of the RCB. In addition, the RCB is constructed with the pre-stressed concrete having the high compress strength of 6,000 psi after 91 days of curing.

The reactor vessel cavity is designed such that molten core materials spread out its heat transferable area of not less than 0.02 m^2/MW and is cooled to solidify on the cavity floor. Also, the convoluted vent path of the reactor vessel cavity prevents the molten core debris from releasing to the containment atmosphere.

In the APR1000 design, the major design characteristics for the RCB are addressed as follows:

- Enlarged free volume of the RCB to maintain the structural load below the code requirement and to keep the hydrogen concentration below the design limit
- Lined with 1/4 inch steel plate on the inboard side of the RCB to prevent the leakage of radioactive materials
- Reinforced RCB with high compressive strength of 5,500 psi
- Spacious reactor vessel cavity and convoluted vent path for the SAs mitigation

3.5 Seismic Design

The building and structures are designed with the application of the Safe Shutdown Earthquake (SSE) of 0.3g as a design basis earthquake (DBE) to increase their ductility against earthquakes. The seismic input motion enforced in the high frequency range is applied to envelope the design ground response spectrum of the Reg. Guide 1.60 standard spectrum. In the meantime, the design load of operating basis earthquake (OBE) is eliminated to improve design and verification according to 10CFR50 Appendix S. Since the seismic evaluation is performed with the inclusion of the effects of

soil structure interaction on soil sites, the APR1000 can be constructed on rock bed sites as well as soil sites.

4. Proliferation resistance

Normal fuel manufactured for use in the water cooled reactors is low-enriched uranium (LEU, < 5% U-235) before irradiation. It is not possible to use this material as a weapon. Technically, the plutonium that arises from today's high burnup fuel should be undesirable as weapons material. Also, the discharged fuel assemblies are far too radioactive to be accessible for potential diversion, and when held in shielded casks, far too heavy for normal transport. In addition, plutonium is chemically very toxic, so remote handling is necessary in a reprocessing factory.

Korea is a member of IAEA, joined NPT on April 23, 1975 to use peaceful nuclear power. Now Korea has no uranium enrichment, reprocessing facilities, and spent fuel waste site, but secure the nuclear material inside the restricted areas and facilities.

5. Safety and Security (physical protection)

The APR1000 design and plant layout considered safety and security in various ways in which the design and configuration inherently protects the plant against human induced malevolent external impacts and insider action. The physical security system is designed in accordance with the applicable regulations and is expected to provide protection against malevolent acts of sabotage with high assurance.

The main design features for the APR1000 safety and security are as follows:

- Thick concrete walls for exterior and a large number of interior walls protect those equipments important to safety and provide a significant deterrent to penetration. The Auxiliary Building is physically separated in 2 trains, which provides adequate physical separation and barrier.
- The entry control point to the plant is centralized with security facilities and located in the compound building.
- A robust vehicle barrier system that is located at a safe standoff distance.
- Fencing is employed to establish a perimeter boundary at a sufficient distance such that under normal circumstances, security response force personnel are able to identify and engage a potential land based assault.
- An intrusion detection system is employed adjacent to the protected area boundary fencing to provide indication of unauthorized attempts to enter the protected area.
- A closed circuit television network is used to provide remote monitoring of the protected area boundary.
- An access control system is utilized to permit only properly authorized personnel into designated areas of the facility.

6. Description of turbine-generator systems

6.1 Turbine generator system

The turbine generator system consists of the main steam, feedwater, extraction steam and heater drain, condensate, turbine generator and auxiliary systems. For these systems, heat balance optimization was made considering system operability, reliability, availability and economy.

The turbine is an 1800-rpm, tandem-compound, six-flow, reheat unit with 43-inch last stage buckets. The turbine includes one double-flow high-pressure turbine, three double-flow low-pressure turbines, and two moisture separator reheaters with two stages of reheating. The direct-driven generator is conductor cooled and rated at 1219 MVA at 22 kV, 3-phase, 60 Hz.

Other related system components include a complete turbine generator bearing lube oil system, a high pressure hydraulic fluid system, a digital control & monitoring system, a turbine steam seal system overspeed protective devices, turning gear, a generator seal oil system, a stator cooling water system, and excitation system.

6.2 Condensate and feedwater systems

The condensate and feedwater systems are designed to deliver the condensate water from the main condenser to the steam generator. The condensate pumps consist of three 50% capacity motor-driven pumps (two operating and one standby). The feedwater pump configuration is selected to be three 55% capacity turbine driven pumps because of its ability to allow more reliable operation; all three pumps are normally operating, and the plant can remain at 100% power operation even in the case that one of the feedwater pumps is lost.

During the shutdown and startup, a motor-driven startup feedwater pump provides feedwater from the deaerator storage tank. The startup feedwater pump is capable of providing up to 5% of full power feedwater flow to both steam generators. On-line condensate polishers, which can operate in full and partial flow, as well as in bypass mode, are provided to maintain proper water chemistry during normal power operation. In the feedwater systems, the feedwater heaters are installed in 7 stages and arranged horizontally for easy maintenance and high reliability.

The condensate and feedwater systems provide heated feedwater to the steam generators. The systems have the capability of maintaining the proper feedwater inventory in the steam generator during plant load changes. The condensate and feedwater systems consist of the piping, valves, pumps, heat exchangers, controls, instrumentation, and the associated equipment that supply the steam generators with heated feedwater in a closed steam cycle using regenerative feedwater heating. The main portion of the feedwater flow is condensate pumped from the main condenser hotwells by the condensate pumps. There are three 50% capacity vertical centrifugal condensate pumps with motor drives and common suction and common discharge headers. Two pumps are normally in operation and the third pump will automatically start if one condensate pump trips. The condensate pumps take suction from the condenser hotwell and pump condensate through the condensate polishing system, the steam packing exhauster, and the low-pressure feedwater heaters, including the deaerator to the two deaerator storage tanks. The main feedwater isolation valves are designed to isolate the feedwater system from the steam generator in the event of a steamline break, feedwater line break, or loss-of-coolant accident (LOCA). This isolation precludes any possibility of radioactivity release from the containment due to a feedwater pipe break.

6.3 Auxiliary systems

6.3.1 Turbine bypass system

The turbine bypass system provides the capability to dump 55% of the rated main steam flow following a loss of the external electrical load and/or a turbine generator trip. The 40% of the rated main steam flow is discharged to the condenser and 15% is bypassed to atmosphere.

6.3.2 Turbine building open cooling water system (TBOCW)

The TBOCW system supplies seawater to the service side of the turbine building closed cooling water (TBCCW) heat exchangers. In the APR1000 plant design, the TBOCW system interfaces with the circulating water (CW) system to take the fresh seawater and discharge the heated seawater to the CW discharge conduit.

6.3.3 Condenser vacuum system

The condenser vacuum (CV) system supports the plant startup and maintains the condenser vacuum by continuously removing non-condensible gases and air. The system consists of four 33-1/3% capacity mechanical vacuum pumps. All four pumps perform the hogging (startup) functions; with three of the four pumps operated for condenser evacuation during plant normal operation. To establish the initial condenser vacuum, the main unit turbine generator is placed on the turning gear, the condensate system is placed in service, and the turbine sealing steam is applied. After the turbine steam seals are established, all pumps initially remove the air from the main condenser to draw down the pressure of the condenser and low-pressure turbine casings.

7. Electrical and I&C systems

7.1 I&C Systems

7.1.1 Design concept including control room

The APR1000 is equipped with digitalized instrumentation and control (I&C) systems and computer-based man-machine interface (MMI) in the control room, reflecting the status of modern electronics and computer technologies. The I&C and control room concept implemented in the APR1000 design is schematically depicted in Figure 9.

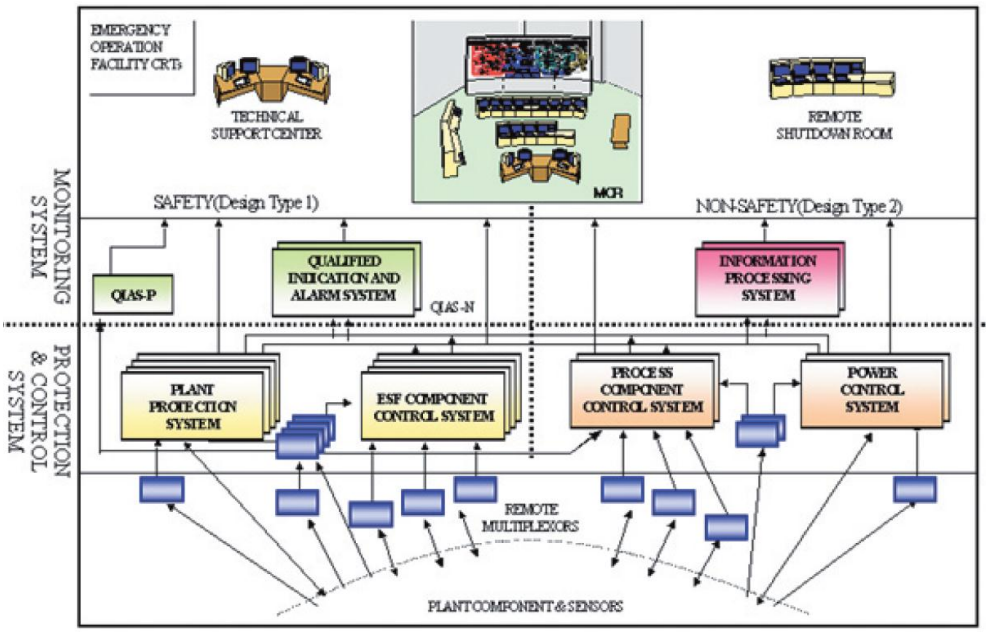

Figure 9. MMIS configuration

The APR1000 I&C system is designed with the network-based distributed control architecture. In this architecture, operator interface functions and control functions for NSSS, BOP and TG are integrated in common design standards and implemented in common digital system for high functionality, easy operation, and cost effective maintenance. Diversity between safety I&C systems and non-safety I&C systems together with hardwired switches are provided for the defense-in-depth against common mode failure of software in the safety I&C systems.

The main features of the I&C system are the use of distributed control system (DCS) and microprocessor-based programmable logic controllers (PLCs) for the control and protection systems, and the use of workstations and industrial PCs (personal computers) for data processing systems.

The man machine interface system (MMIS) of the APR1000 consists of monitoring, protection and control systems with field devices (i.e. transmitters, RTDs, etc) on a large scale. Operator interface for the MMIS is provided by the main control room (MCR), the remote shutdown room (RSR), the technical support center (TSC) and the local panels. The MCR contains workstations, a Large display panel (LDP), and a safety console.

To protect against the common mode failures in software due to the use of software-based I&C systems, DCS and PLCs will be required in the redundant systems for diversity. For data communication, a high-speed fiber optic network based on standard protocols is used. The remote signal multiplexer is also utilized for the field signal transmission of the safety and non-safety systems.

Defense against the common mode failure (CMF) of the digital plant protection systems is one of the key requirements in designing digital I&C systems. The diverse protection system (DPS) is designed to be diverse from the plant protection system (PPS) against the CMF of the digital plant protection system. Diverse manual ESF actuation is also designed to keep the plant safety against severe situations due to a simultaneous digital system failure of the plant protection system (PPS) and the DPS. The open architecture concept is applied to the configuration of the I&C system for high reliability and maintainability. In addition, the stringent software & hardware qualification process is established and followed for the life cycle.

The extensive Human Factors Engineering (HFE) program is incorporated to reduce the possibility of human error in the MCR. During the conceptual and basic design at the R&D stage as well as during the construction phase of the plants, the MMI design has been analyzed and evaluated in an iteratively expanding manner with participation of more than 100 licensed operators and human factors specialists to optimize the design. During the APR1000 development, the evaluation for the MMI design has been performed seven times with full scope dynamic mockups and an APR1000 specific dynamic mockup. The evaluation verified that the MMI are suitable for the human factor principles and guidelines. The new MCR design was also validated to support the normal and emergency operations appropriately.

7.1.2 Reactor protection and other safety systems

The plant protection system (PPS) includes the electrical, electronic, networking, and mechanical devices to perform the protective functions via the reactor protection system (RPS) and engineered safety features actuation system (ESFAS). The RPS is the portion of the PPS that acts to trip the reactor when the monitored conditions approach specified safety settings and the ESFAS activates the engineered safety systems by safety injection actuation signal and the auxiliary feedwater actuation signal, and etc.

The reactor protection system and other safety-related systems are designed to use the off-the-shelf digital equipment which is commercially available to standardize the components and minimize the maintenance cost with the consideration of diversity. A high degree of conservatism is required in the design of the safety-related systems, and therefore, design principles such as redundancy, diversity, and segmentation have been incorporated in order to achieve both the desired availability and reliability of these systems.

A high reliability of the protection system is ensured by self-diagnostics, and automatic functional tests through surveillance using four independent channels. The redundant and fault tolerant configuration on controllers and the use of fiber-optics to isolate communications will increase system availability and maintainability.

A detailed software development program for software-based Class 1E systems were produced and applied as a guideline to ensure completeness of the software implementation, verification and validation process. Several critical safety systems were evaluated through prototyping and design verification programs.

7.2 Electrical systems

The electrical one line diagram of the APR1000 is shown in Figure 10.

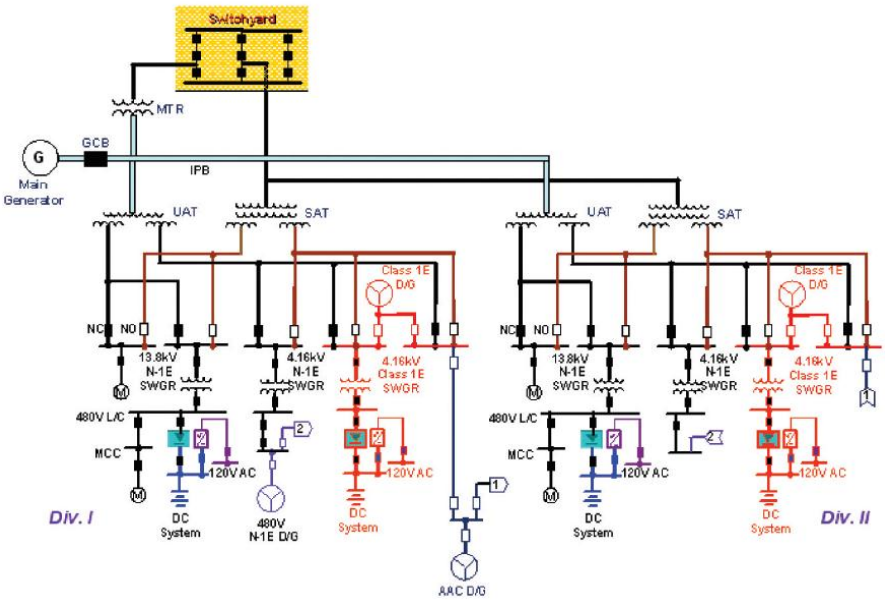

Figure 10. One line diagram

An offsite power system and an onsite power system are provided to supply the unit auxiliaries during normal operation and the Reactor Protection System and Engineered Safety Feature Systems during abnormal and accident conditions.

The generation unit is connected to a switchyard via two separate and independent circuits. The switchyard is connected to the onsite power system through the main transformer and the unit auxiliary transformers, which allow this circuit not only to supply the generated power of the APR1000 to the transmission network during normal operation, but also to serve as an immediate access circuit of the preferred power source (PPS). As the second immediate access circuit of the PPS, the other independent circuit is connected to the switchyard via two standby auxiliary transformers, to provide power to the safety related plant auxiliaries.

The onsite power system for the unit consists of the main turbine-generator, the generator circuit breaker, the unit main transformer, the unit auxiliary transformers, the standby auxiliary transformers, the class 1E diesel generators, the alternate AC sources, the DC power system and the instrument and control power system. Under normal operating conditions, the main generator supplies power through the forced air-cooled isolated phase bus duct and generator circuit breaker to the main transformer, the excitation transformer and two unit auxiliary transformers.

The safety related Class 1E loads are divided into two redundant and independent load group divisions A and B. Each load division is capable of being supplied power from the following sources, listed in decreasing order of priority:

- Main Turbine Generator
- Main Transformer and Unit Auxiliary Transformers (PPS 1)
- Standby Auxiliary Transformers (PPS 2)
- Emergency Diesel Generators
- Alternate AC Source

If both the offsite power sources and the standby emergency diesel generators are unavailable, only one (1) engineered safety feature bus of the two (2) divisions will be powered from an alternate AC (AAC) Source to cope with the station black out (SBO).

7.2.1 Operational power supply systems

The main power system consists of the generator, generator circuit breaker, main transformer, unit auxiliary transformer and stand-by transformer. The generator is connected to a gas-insulated 345 kV switchyard via the main transformer which is made of three single-phase transformer units. Step-down unit auxiliary transformers are connected between the generator and main transformer, and supply power to the unit equipment for plant startup, normal operation and shutdown. The stand-by transformer is always energized and ready to ensure rapid power supply to the plant auxiliary equipment in the event of failure of the main and unit auxiliary transformers.

7.2.2 Safety-related systems

The electric power necessary for the safety-related systems is supplied through 4 alternative ways: firstly, the normal power source, i.e., the normal off-site power and the in-house generation; secondly, the stand-by off-site power, i.e., the off-site power connected through the stand-by transformer; thirdly, the on-site standby power supply, i.e., two diesel generators; and finally, the alternative AC source.

Among these power sources, the on-site standby power is the most crucial for safety; it should be available in any situation. The arrangement of the on-site electrical distribution system is based on the functional characteristics of the equipment to ensure reliability and redundancy of power sources.

The on-site power supply is ensured by two independent Class 1E diesel generator sets; each of them is located in a separated building and is connected to one 4.16 kV safety bus.

The alternate AC source adds more redundancy to the electric power supply even though it is not a safety grade system. The non-class 1E alternate AC is provided to cope with loss-of-off-site-power (LOOP) and station blackout (SBO) situation which have a high potential of transients leading to severe accidents. The alternate AC source is sized with sufficient capacity to accommodate the loads on the safety and the permanent non-safety buses.

8. Spent fuel and waste management

Radioactive waste management systems include systems, which deal with liquid, gaseous and solid waste, which may contain radioactive material. The Liquid, Gaseous and Solid Waste Management Systems are located in the compound building.

8.1 Liquid waste management system (LWMS)

The design objectives of the liquid waste management system (LWMS) is to protect the plant personnel, the general public, and the environment by providing a means to collect, segregate, store, process, sample, and monitor radioactive liquid waste. Each type of liquid waste is segregated to minimize the potential for mixing and contamination of nonradioactive flow streams. The processed liquid radioactive waste is sampled prior to release from monitor tanks and radiation monitors are provided in the discharge line to provide for a controlled monitored release.

The function of the liquid waste management systems is to collect radioactive or potentially radioactive liquid wastes generated during normal plant operation, including anticipated operational occurrences; to process the liquid waste in order to remove radioactive isotopes; to hold up the liquid wastes for radioactive decay or delayed processing; and discharge the treated liquids to the environment.

The liquid radwaste system (LRS) consists of various tanks, pumps, Reverse Osmosis(R/O) packages and associated piping, valves, and instruments.

8.2 Gaseous waste management system (GWMS)

A gaseous radwaste system (GRS) processes radioactive gaseous waste generated within plant equipmemt so that the onsite and offsite radiation exposure to personnel are maintained within acceptable limits. The system is located in the Compound Building, which is designed to withstand an operating basis earthquake.

Low activity gaseous wastes are filtered in the HVAC system prior to release to the atmosphere. The low activity gaseous wastes systems consist of the building ventilation exhaust systems, the main condenser evacuation system, and the turbine gland sealing system.

The gaseous radwaste system (GRS) is comprised of one collection header, one header drain tank, two dehumidifier trains, four charcoal delay beds, one HEPA filter, one nitrogen injection skid, one chiller skid, radiation monitor and two gaseous wastes analyzer. Dehumidifier train consists of one waste gas dryer and one guard bed. The gaseous wastes charcoal delay beds adsorb the radioactive krypton and xenon atoms and delay them for radioactive decay.

After passing through the charcoal delay beds, the gas is discharged through a HEPA filter and a radiation monitor. The gas is purged with nitrogen thereby precluding air migration in the system during low or no flow period. Radiation monitoring is provided on the discharge line from the charcoal delay beds and on the Compound Building HVAC vent. The Compound Building HVAC exhaust radiation monitor is interlocked to shut the discharge line isolation valves on high radiation level.

8.3 Solid waste management system (SWMS)

The solid waste management system for the APR1000 is designed to provide holdup, solidification, and packaging of radioactive wastes generated by plant operation, to handle the packaged solid radioactive waste, and to store these wastes until they are transferred to the yard storage area or shipped offsite for disposal. The system is located in the Compound Building, which is designed to withstand a safe shutdown earthquake.

Primary functions of the SWMS include providing means by which spent resin, filters, etc. from the LWMS and primary letdown systems are processed to ensure economical packaging within regulatory guidelines, as well as handling dry, low activity wastes for shipment to a licensed disposal facility.

9. Plant layout

9.1 Buildings and structures, including plot plan

The general arrangement of the APR1000 has been developed based on the single-unit concept which is expandable into the twin units with slide-along arrangement.

The major building of the APR1000 is comprised of Reactor Containment Building, Auxiliary Building, Compound Building, Turbine Generator Building, Fuel Handling Building, and Emergency Diesel Generator Building. The Compound Building includes for access control area, radwaste treatment area, and hot machine shop, which in the case of twin unit site, will be commonly utilized for both units. The Turbine Generator Building is located in a peninsular arrangement with respect to the Containment as shown in Figure 11.

Each power block layout is designed to provide full control over personnel access through a single access control point during normal operation. Additional exit is provided for emergency condition. The plant design life for each building design and layout is 60 years from the commercial operation data at normal operation conditions.

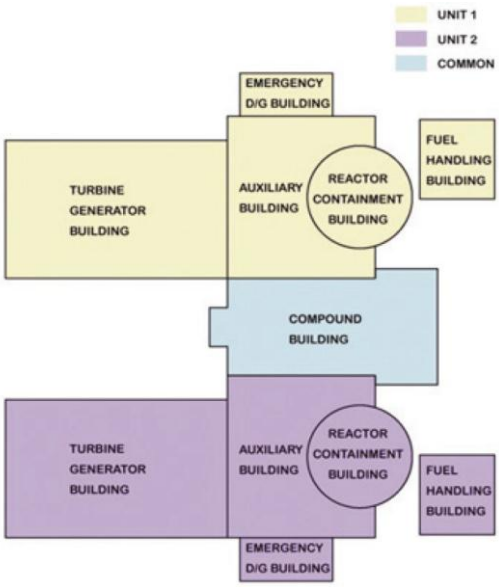

Figure 11. Plant General Arrangement

The design strength of the buildings in the safety category, which are the containment and the auxiliary buildings, is sufficient to withstand the effects of earthquakes up to the safe shutdown earthquake (SSE) of 0.3 g.

9.2 Reactor containment building

The Reactor Containment Building encloses the entire pressurized water reactor, steam generators, reactor coolant loops, and portions of the auxiliary and engineered safety features systems.

The Reactor Containment Building is a pre-stressed concrete structure in the shape of a cylinder with a hemispherical dome and a flat foundation slab as seismic category I. The cylindrical portion of the containment structure is pre-stressed by a post-tensioning system consisting of horizontal (hoop) and vertical (inverted U) tendons.

The Reactor Containment Building completely encloses the Reactor and RCS and is designed so that the leakage of radioactive materials to the environment will not exceed 0.1% of the total containment free volume in 24 hours and 0.05% volume/day thereafter.

The internal structures and compartment arrangement provide equipment missile protection and biological shielding for maintenance personnel. The Containment Building is designed for all credible loading combinations, including normal loads, loads during a LOCA, test loads, and loads due to adverse environmental conditions. The flat circular foundation base slab (basemat) has a central cavity and instrumentation tunnel. This base slab is composed of conventional reinforced concrete.

Access to the interior of the containment is provided through two personnel airlocks. One airlock is for normal access and the other is for emergency exit use. An equipment hatch permits transfer of equipment into and out of the containment. In addition to these access openings, other major penetrations provided in the containment wall are those required for main steam, feedwater, and HVAC lines.

The reactor building is the central building of the plant. APR1000 is a pressurized water reactor, and the reactor building essentially coincides with the containment building.

9.3 Auxiliary building

The auxiliary building houses the main control room (MCR), pumps and heat exchangers for the safety injection system and shutdown cooling system. Also, the auxiliary feedwater tanks are located in the auxiliary building. The safety equipments are spatially separated to enhance the safety and reliability of safety systems. Each train of safety injection systems (SIS), which consists of two trains, is located in the respectively separated divisions.

In order to improve the convenience of operation and maintenance, the inner arrangement of auxiliary building is designed to provide the space and the lifting rig for replacing heat exchangers. The technical support center (TSC) is arranged adjacent to MCR for promoting a communication between operators and technical crew during abnormal plant situations. The passages for visitors and plant crews are designed not to overlap each other in fuel handling area, MCR and turbine operating floor. The internal arrangement of components is divided into the radiation area and clean area to reduce the occupational exposure dose.

9.4 Compound building arrangement

The Compound Building is designed to integrate an access control area, a radwaste treatment area, primary and secondary sampling laboratory, and a hot machine shop. It is designed to provide protection against natural phenomena and to accommodate associated environmental conditions to the extent necessary to retain the spillage of potentially contaminated solids or liquids within the building. It has no major structural interface with other buildings. It is designed with reinforced concrete structure classified as seismic category II.

In a twin-unit site, the common facilities for both units are located in the Compound Building, of which arrangement makes the access between both units convenient and contributes to reducing the site area by a compact design. The Compound Building, with a radwaste management function, is shared between both units and contains the liquid waste, gaseous waste, and solid waste systems.

9.5 Turbine building

The turbine building houses the turbine generator, the condenser system, the preheater system, the condensate and feedwater systems, and other systems associated with power generation. The turbine building configuration is simplified for constructability, and the maintainability of the systems is improved by centralizing the condensate polishing system, separating the switchgear building, and rearranging the equipment hatches.

The turbine Generator building layout provides space for a condenser tube pull area, removable hatches to gain access to heavy equipment with either overhead crane and equipment removal openings at one end of the building.

The turbine building is classified as non-safety related. It has no major structural interface with other buildings except for a seismic interface with the connecting auxiliary building. It is designed such that its failure under SSE conditions will not cause the failure of safety related structures. The turbine building is located such that the containment building is at the high pressure turbine side on the projection of the turbine shaft. This allows the optimization of the piping and cable routes to the nuclear island. This arrangement also minimizes the risk of damage to safety-related equipment by missiles from the turbine or the generator in the event of an accident.

9.6 Fuel Handling Building

The Fuel Handling Building houses the areas for new and spent fuel storage and its supporting equipment. The Fuel Handling Building is a seismic category I reinforced concrete structure. The vehicle loading and unloading area is provided adjacent to the decontamination area. A space is provided within the building to permit inspection, tiedown adjustments, radiation monitoring, and storage of removable tiedown equipment. A vehicle cleanup and maintenance area is provided outside the building to service incoming vehicles by washing away road dirt, cinders, and so on.

A decontamination area is sized to permit the storage of a shipping cask, shipping cask head, and all other necessary rigging. A space is also allowed for portable scaffolds, elevated platforms or ladders to gain access to the upper parts of the cask. An ample room is provided in the decontamination area for the free passage of operating personnel around this equipment.

The spent fuel pool is designed to allow installation of the spent fuel storage rack for a twenty (20) year fuel storage capacity. Fuel assemblies are to be placed in vertical cells and are grounded in parallel rows.

9.7 Switchgear building

The switchgear building is located in the vicinity of the turbine building and all the electrical switchgears are centralized in this area for the convenience of maintenance and efficiency of space allocation.

10. *Plant* Performance

10.1 Operational performance

The APR1000 design is optimized to achieve the high operation performance and to enhance the convenience of maintenance by incorporating the following improvements:

- Improvements for in-service inspection (ISI)

The reactor head is manufactured as one piece by integrating the flange and upper shell based on the advanced forging capacity of manufacturer. In the conventional plant, the flange and upper shell are fabricated separately and welded to each other. This improvement reduces the girth seam, for which in-service inspections have to be performed over the lifetime. Also, the work platforms are installed to enhance the convenience of ISI for steam generators.

- Enhanced refueling works

The fuel handling devices are improved to reduce the refueling time. In particular, a fuel transfer tube, connecting the containment building and the fuel handling area in the auxiliary building, is improved to be opened quickly by remote control so that the exposure dose is reduced. In addition, a temporary fuel storage rack can be installed inside the refueling pool to be used under an abnormal condition during the refueling. The design of the In-Core Instrument (ICI) cable tray is improved so that it is not necessary to install and disassemble the ICI for every refueling. This reduces the polar crane load and simplifies the task related to ICI cable.

- Design features for reducing unplanned trip

To reduce unplanned reactor trips, the core thermal margin is increased by more than 10 % through lowering the core outlet temperature and increasing the RCS coolant flow. In addition, the pressurizer volume relative to power is enlarged to enhance the capability of coping with the transients.

The turbine rotor is manufactured as one piece by forging to reduce the susceptibility of stress corrosion cracks (SCCs). The turbine control system is improved to enhance its reliability and maintainability by the redundant design of controllers and the strengthening of the diagnostic functions.

The vibration monitoring functions are improved by strengthening the self-diagnostic functions of the detectors and multidirectional measurements. In addition, earthquake-proof structures are installed to prevent a turbine trip caused by high vibration.

The APR1000 adopts a static excitation type to reduce mechanical wearing. The auto-voltage regulator (AVR) is placed in a dedicated room to minimize its malfunction by protecting it from heat and humidity. Also, the filtration abilities of the stator cooling water pipelines are strengthened not to heat up by the reduced coolant flow.

The feedwater flow control system is designed to control the feedwater flow automatically over the full operation range and to operate three turbine driven main feedwater pumps during normal power operation. When one main feedwater pump is tripped during the full power condition, the other two main feedwater pumps will be able to provide the total feedwater flow to the full power condition. This design reduces unnecessary power cutbacks and unplanned turbine trips.

10.2 Construction

A new construction schedule and constructability enhancement methods were developed based on the experience from the repeated OPR1000 constructions. The APR1000 is seismically enhanced with applying 0.3g safe shutdown earthquake (SSE) as a design basis earthquake (DBE).

Modularization has been introduced to reduce the construction period and cost. There are three types of modules as follows: structural, mechanical equipment, and composite modules. The structural modules are implemented for re-bar and liner plates. To expand the modular construction, the steel-plate concrete (SC) structure module, the mechanical equipment modules, and the composite modules are under development. If the composite modules are applied to all buildings in the Nuclear Power Plant, the construction period is expected to be dramatically reduced to less than 40 months through the pre-fabrication at both the factory and the site.

For the mechanical and electrical equipment and piping installation, it is recommended to increase the fabrication portion in the manufacturing shops. Approximately 80 items of APR1000 including auxiliary and RCB water chillers and pumps, feed water pumps and turbine drives, charging pumps, turbine building component cooling water heat exchangers, and condensers have been identified to be capable of modularization.

10.3 Design verification by 3D CAD system

To successfully accomplish the APR1000 development from conceptual design to construction, the entire plant design processes have been reviewed using a 3D CAD model. Design output was made with frozen model after the verification of the 3D CAD model. This design verification improved both the quality and the timeliness of the project design.

We developed a new 3D CAD system called tri-dimensional design verification system (TDVS) to improve and streamline the existing engineering process for the main 2D design work and subsidiary 3D review work as shown in Figure 12. In the TDVS, all engineers should use 3D models at every stage of the design process and review 3D models from various points-of-view, and produce deliverables based on the verified 3D models. Each 3D design is controlled and managed through TDVS to implement design work procedures, and to share and distribute the correct information to the right people without delay.

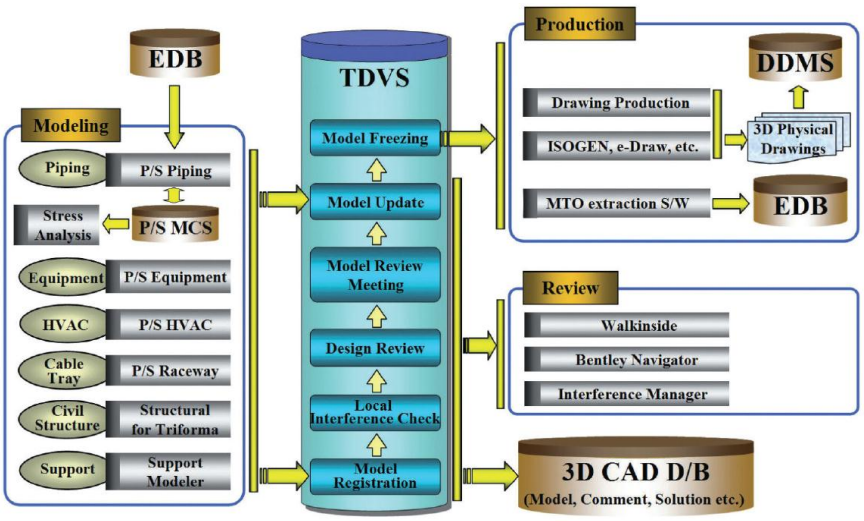

Figure 12. 3D Design Verification System

Engineers of each discipline make 3D CAD models themselves. The 3D CAD system is connected with the engineering data base (EDB) system. For example, when the engineer routes the pipe with

3D CAD modeling software, the data for this pipe line, such as line number, line size, specifications, pressure and temperature, come from the EDB so engineers don't have to type the engineering information.

Reviewing a 3D CAD model is done with various exclusive types of software to verify design information and configuration. Engineers from each discipline can check physical interferences using exclusive interference detection software, which can detect interference automatically. Since lots of concrete structures are built in a nuclear power plant, it is very important to check the accessibility of the main equipment prior to construction. Therefore, engineers should use the animation program to make a scenario and check for the carrying in and out of the equipment. The virtual character technique of computer games is applied to the plant design. An engineer enters the 3D integrated model as a virtual character, and can look for various components, as if an engineer is actually performing a walk-through inspection. The 3D CAD system is connected to the EDB and drawing and document management system (DDMS). When an engineer reviews a 3D CAD model, an engineer can review the engineering information and related drawings together at the same time.

Engineers can produce various deliverables such as a drawing and bill of material by using a verified 3D CAD model. After verifying the piping model, an engineer can create a piping plan and section drawing with exclusive software. The software performs hidden-line removal to convert the view from an incomprehensible wire-frame into a standard line-drawing. The software allows automatic annotation and dimensioning of the drawing. This Piping Modeling software extracts and converts piping data and transfers them to drawing generation software. The drawing generation software creates fully annotated piping fabrication isometric drawings with the related bill of material. After verifying the support model, an engineer can create support drawings. Drawing generation software creates plan, section, and isometric views on the drawing with the related bill of material. After verifying the piping model, the engineer can create a piping plan and section drawings with exclusive software. The software allows the semi-automatic annotation of the drawing. The designer points at items in the drawing and the software retrieves their label from the 3D CAD model and allows the designer to place them in the drawing.

10. 4 Construction schedule

Along with many new construction methods, the mechanical and structural composite modularization technologies have been applied to the construction of Shin-Kori 1 & 2 which is the reference plant of the APR1000.

The Over the Top method allows the major components in the containment to be manufactured as large modules and installed in the early phase of construction. The modular construction method is applied to the containment liner plate (CLP) and stainless steel liner plate (SSLP) to reinforce the steel and the structural steel module. This method is also applied to the fabrication of equipment such as the reactor internals and the condenser.

The 4D simulation is a combination program of 3D CAD and schedule management, so it shows the construction process based on the time table. Using the virtual construction program, it is possible to develop an effective construction schedule, and identify potential construction interferences before they may occur.

The deck plate construction method is applied for the construction and the installation of mechanical and electrical equipments to be carried out simultaneously in the auxiliary building and compound building. Thus, it is estimated that the Shin-Kori 1 & 2 will be constructed in less than 47 months.

By using the new construction method and management program, it is expected that succeeding units (the Nth Unit) of the APR1000 could be constructed within 40 months.

11. Deployment status and planned schedule

11.1 Republic of Korea

The Shin-Kori 1&2, the base plant for the APR1000, construction project has been launched by KHNP (Korea Hydro and Nuclear Power Company) after the basic construction plan was fixed on August 2000. The Shin-Kori 1&2 plant is under construction at Shin-Kori site in the Republic of Korea, located right next to the existing Kori nuclear power plant units 1-4 currently under operation. The construction permit (CP) was issued by Korean government on July 2005, and the first concrete pouring for the unit 1 was done on June 16, 2006, while the unit 2 followed 1 year behind unit 1. After a successful structural and building construction as well as main equipment manufacturing, the reactor vessel of the unit 1 was installed on April 1, 2008.

The initial fuel loading of the Shin-Kori 1 was on June 1, 2010. The construction period from first concrete to initial fuel loading was 47 months.Commercial operation was February 2011.

Figure 13 shows the view of the Shin-Kori 1&2 site.

The Shin-Kori 3&4, the first APR1400 plant next to the Shin-Kori 1&2 has been constructed with the major supply and construction contracts signed in August 2006. Site grading started in September 2007 and construction permit (CP) was issued by the Korean government on April 15, 2008 on which power block excavation started. The first concrete pouring for unit 3 was done on October 15, 2008 as scheduled, while the unit 4 followed 1 year behind unit 3. After a successful structural and building construction as well as main equipment manufacturing, the unit 3 reactor vessel was installed on July 15, 2010, which was 15 days ahead of schedule.

The Shin-Kori 3&4 is scheduled with 51 month construction period from first concrete to initial fuel loading. The initial fuel loading is scheduled on January 1, 2013 for unit 3 after receiving the operation license (OL) from the government. Commercial operation is scheduled in September 2013 and 2014 for the units 3 and 4, respectively.

Figure 13. Shin-Kori units 1&2

The second APR1400 construction project has also been launched to construct Shin-Ulchin nuclear unit 1&2. As of August 2010, site preparation work and CP review are in progress with the expected CP by the end of 2010. The Shin-Ulchin 1&2 are scheduled to be in commercial operations in June 2016 and 2017 for unit 1 and 2, respectively. The Shin-Ulchin 1&2 design is basically the same as the Shin-Kori 3&4 except I&C and MMIS equipments and the reactor coolant pump supplier. These

equipments will be manufactured based on the result of government funded research and development project.

According to the Republic of Korea's national electricity development plan, another 4 units of the APR1400 will be constructed after Shin-Ulchin 1&2. The Shin-Kori unit 5&6 will be constructed right next to the Shin-Kori 3&4 with the commercial operation target in 2018 and 2019 for unit 5 and 6, respectively. Currently, KHNP and suppliers are preparing for the construction project and contract negotiation.

In 2009, the Korean government established so called "Long-term national energy master plan by 2030". This plan call for further expansion of nuclear energy for electricity in Korea with a target of 41% of installed electricity generation capacity in 2030 by nuclear as compared to the current 26%. In terms of electricity generation, nuclear is planned to provide 59% of total electricity generation in 2030 as compared to the current 35%.

11.2 United Arab Emirates (UAE)

On December 27, 2009, UAE and the Republic of Korea signed a historical prime contract for supplying 4 units of the APR1400 to UAE, the first nuclear power plant in UAE as shown in Figure 14. Braka on the Persian Gulf coast, west of Abu Dhabi has been selected as the construction site. The Braka Nuclear Power Plant (BNPP) is scheduled to be in commercial operation in May 2017 for unit 1 and one for each following years till 2020 for unit 4. The preliminary safety analysis report (PSAR) for BNPP will be submitted to FANR (The Federal Authority for Nuclear Regulation of the UAE) by the end of 2010, and the CP is expected to be issued by June 2012. Major milestones for unit 1 include first concrete on October 2012, reactor vessel setting in July 2014, operation license and fuel loading by October 2016, and commercial operation on May 1, 2017.

Figure 14. Braka Nuclear Power Plant

The BNPP design is based on that of the Shin-Kori 3&4. However, a number of design changes will also be implemented mainly related to the site specific environmental conditions that are different from those used in the Shin-Kori 3&4 such as the seismic floor response spectra, ultimate heat sink temperature, ambient air temperature, and 50 Hz electrical grid. Also, the major safety and security related issues currently on effect in the global nuclear industry such as aircraft crash and cyber security need to be addressed in the BNPP design.

The plant owner in UAE is ENEC (Emirates Nuclear Energy Corporation) and the prime contractor for supplying BNPP in Korea is KEPCO (Korea Electric Power Corporation). KEPCO arranged all necessary subcontractors for suppliers and constructors.

11.3 Others

The repeated construction know-how and operation experience are employed throughout the APR1000 design.

KEPCO is under discussion with several countries over the world for a possible supply of the APR1000 as well as the APR1400. Also Korean nuclear industries are ready to fit the customer's specific demand.

KEPCO submitted the documents of the APR1000 for the IAEA safety review on September 2010 and the review will be ended in 2011. Moreover, KEPCO started the design certification (DC) process with the U.S.NRC for the APR1400 with the goal of docketing in mid 2012 and final certification in 2015.

12. References

The preliminary standard safety analysis report (PSSAR) and system description for the APR1000 are the major reference for this material.

Technical Data

General Plant Data

Reactor thermal output	2815 MWth
Power plant output, Gross	1050 MWe
Power plant output, Net	1000 MWe
Power plant efficiency, Net	35.5%
Mode of operation	Baseload and load follow
Plant design life	60 years
Plant availability target >	90%
Seismic design, SSE	0.3
Primary coolant material	Light Water
Secondary coolant material	Light Water
Moderator material	Light Water
Thermodynamic cycle	Rankine
Type of cycle	Indirect
Non-electric application	N/a

Safety Goals

Core damage frequency <	1 E-5/Reactor-Year
Large early release frequency <	1 E-6/Reactor-Year
Occupational radiation exposure	1.0 Persons-Sv/Reactor-Year
Operator action time	0.5 Hours

Nuclear Steam Supply System

Steam flow rate at normal conditions	790 kg/s (per S/G)
Steam pressure	7.4 MPa(a)
Steam temperature	294.4℃
Feedwater temperature	232.2℃

Reactor Coolant System

Reactor operating pressure	15.5 MPa(a)
Core coolant inlet temperature	296℃
Core coolant outlet temperature	327℃
Mean temperature rise across core	10℃

Reactor Core

Active core height	3.81 m
Equivalent core diameter	3.12 m
Average linear heat rate	17.26 KW/m

Fuel material	UO2
Fuel element type	Fuel rod
Cladding material	ZIRLO or M5
Outer diameter of fuel rods	9.5mm
Rod array of a fuel assembly	Square lattice, 16x16
Number of fuel assemblies	177
Enrichment of reload fuel at equilibrium core	4 weight %
Fuel cycle length	18 - 24 months
Average discharge burnup of fuel	54.1 MWd/kg
Burnable absorber (strategy/material)	Gd2O3-UO2
Control rod absorber material	B4C or Inconel slug
Soluble neutron absorber	Boron

Reactor Pressure Vessel

Inner diameter of cylindrical shell	4140 mm
Wall thickness of cylindrical shell	205 mm
Design pressure	17.2 MPa(a)
Design temperature	343.3℃
Base material	SA508, Grade 3, Class 1
Total height, inside	14642 mm

Steam Generator or Heat Exchanger

Type	Vertical U-tube with integral economiser
Number	2
Total tube outside surface area	10009 m^2
Number of heat exchanger tubes	8340
Tube outside diameter	19.05 mm
Tube material	SB-163 Alloy 690

Reactor Coolant Pump (Primary Circulation System)

Pump type	Vertical, single stage centrifugal with bottom suction and horizontal discharge
Number of pumps	4
Pump speed	1190 rpm
Head at rated conditions	102.7 m
Flow at rated conditions	5.39 m^3/s

Pressurizer

Total volume	51 m^3
Steam volume (Working medium volume): Full power	25.77 m^3
Heating power of heater rods	1800 kw

Primary Containment

Type	Pre-stressed concrete
Overall form (spherical/cylindrical	Cylindrical
Dimensions – diameter	43.9 m
Dimensions – height	65.8 m
Design pressure	0.494 MPa
Design temperature	140.6℃
Design leakage rate	0.1 Volume %/day

Residual Heat Removal System

Active/ passive systems	Active

Safety Injection Systems

Active/ passive systems	Active and Passive

General Plant Data

Type of turbines	Tandem compound, 6 flow
Number of turbine sections pre unit (e.g. HP/MP/LP)	1/0/3
Turbine speed	1800 rpm
HP turbine inlet pressure	7.14 MPa(a)
HP turbine inlet temperature	287.1℃

Generator

Type	Direct driven (Water-cooled)
Rated power	1219 MVA
Active power	1000 MW
Voltage	22 kV
Frequency	60 Hz

Condenser

Type	Steam surface
Condenser pressure	5.08 kPa

Feedwater Pumps

Type	Turbine driven
Number	3